a basic
guide to . . .

MACHINE SAFEGUARDING

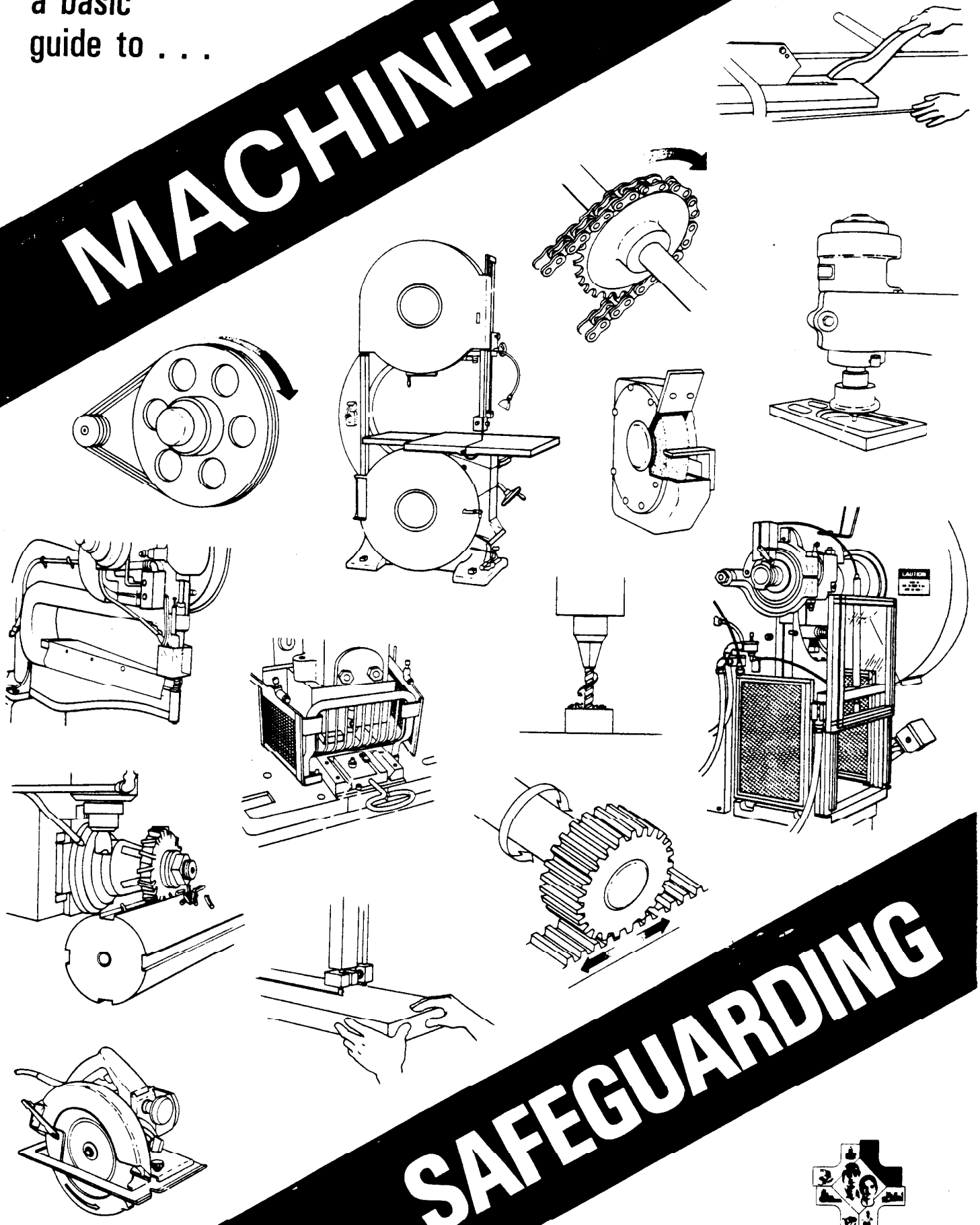

Introduction

This manual has been prepared as an aid to employers, employees, machine manufacturers, machine guard designers and fabricators, and all others with an interest in protecting workers against the hazards of moving machine parts. It identifies the major mechanical motions and the general principles of safeguarding them. Current applications of each technique are shown in accompanying illustrations of specific operations and machines. The concepts described here may be transferred, with due care, to different machines with similar motions. Whether or not a proper safeguard has been manufactured for a particular application, no mechanical motion that threatens a worker's safety should be left without a safeguard.

This text is a manual of basic technical information and workable ideas which the employer may use as a guide to voluntary compliance. It is, however, not a substitute for the occupational safety and health standards. It offers an overview of the machine safeguarding problem in its industrial setting, an assortment of solutions in popular use, and a challenge to all whose work involves machines.

The material contained within this publication was written and compiled by the Office of Training and Education, Occupational Safety and Health Administration.

If you have any questions about the material in this booklet or if you would like further information, please contact one of the offices listed in the back of this booklet.

Chapter 1

Basics of Machine Safeguarding

Crushed hands and arms, severed fingers, blindness—the list of possible machinery-related injuries is as long as it is horrifying. There seem to be as many hazards created by moving machine parts as there are types of machines. Safeguards are essential for protecting workers from needless and preventable injuries.

A good rule to remember is: Any machine part, function, or process which may cause injury must be safeguarded. Where the operation of a machine or accidental contact with it can injure the operator or others in the vicinity, the hazard must be either controlled or eliminated.

This manual describes the various hazards of mechanical motion and action and presents some techniques for protecting workers from these hazards. General information is covered in this chapter—where mechanical hazards occur, what kinds of motions need safeguarding, and what the requirements are for effective safeguards, as well as a brief discussion of nonmechanical hazards and some other considerations.

Where Mechanical Hazards Occur

Dangerous moving parts in these three basic areas need safeguarding:

The point of operation: that point where work is performed on the material, such as cutting, shaping, boring, or forming of stock.

Power transmission apparatus: all components of the mechanical system which transmit energy to the part of the machine performing the work. These components include flywheels, pulleys, belts, connecting rods, couplings, cams, spindles, chains, cranks, and gears.

Other moving parts: all parts of the machine which move while the machine is working. These can include reciprocating, rotating, and transverse moving parts, as well as feed mechanisms and auxiliary parts of the machine.

Hazardous Mechanical Motions and Actions

A wide variety of mechanical motions and actions may present hazards to the worker. These can include the movement of rotating members, reciprocating arms, moving belts, meshing gears, cutting teeth, and any parts that impact or shear. These different types of hazardous mechanical motions and actions are basic to nearly all machines, and recognizing them is the first step toward protecting workers from the danger they present.

The basic types of hazardous mechanical motions and actions are:

Motions

- rotating (including in-running nip points)
- reciprocating
- transverse

Actions

- cutting
- punching
- shearing
- bending

We will briefly examine each of these basic types in turn.

Motions

Rotating motion can be dangerous; even smooth, slowly rotating shafts can grip clothing, and through mere skin contact force an arm or hand into a dangerous position. Injuries due to contact with rotating parts can be severe.

Collars, couplings, cams, clutches, flywheels, shaft ends, spindles, and horizontal or vertical shafting are some examples of common rotating mechanisms which may be hazardous. The danger increases when bolts, nicks, abrasions, and projecting keys or set screws are exposed on rotating parts, as shown in Figure 1.

In-running nip point hazards are caused by the rotating parts on machinery. There are three main types of in-running nips.

Parts can rotate in opposite directions while their axes are

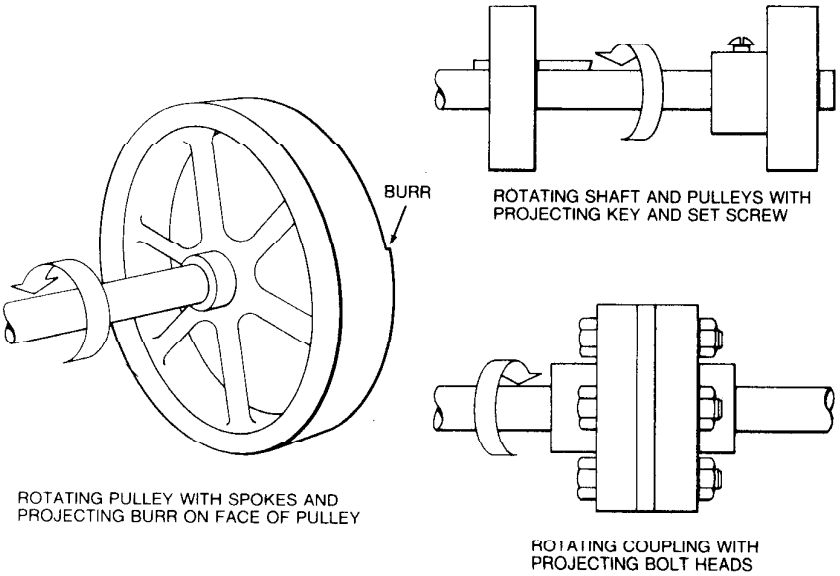

Figure 1.

parallel to each other. These parts may be in contact (producing a nip point) or in close proximity to each other. In the latter case the *stock* fed between the rolls produces the nip points. This danger is common on machinery with intermeshing gears, rolling mills, and calenders. See Figure 2.

Figure 2.

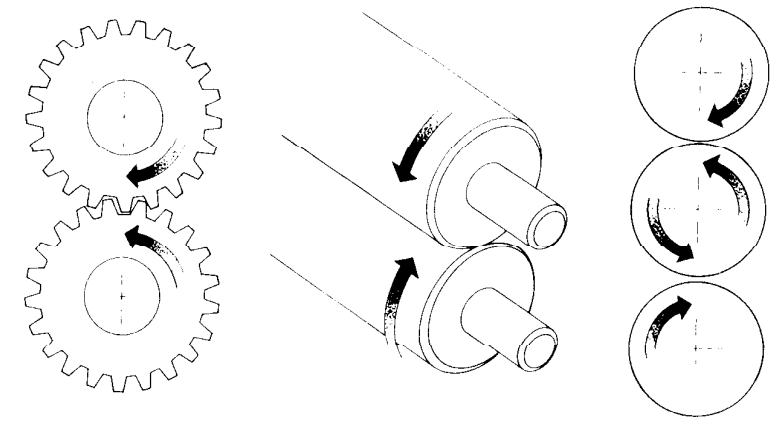

Another nip point is created between rotating and tangentially moving parts. Some examples would be: the point of contact between a power transmission belt and its pulley, a chain and a sprocket, or a rack and pinion. See Figure 3.

Nip points can occur between rotating and fixed parts which create a shearing, crushing, or abrading action. Examples are: spoked handwheels or flywheels, screw conveyors, or the periphery of an abrasive wheel and an incorrectly adjusted work rest. See Figure 4.

Reciprocating motions may be hazardous because, during the back-and-forth or up-and-down motion, a worker may be struck by or caught between a moving and a stationary part. See Figure 5 for an example of a reciprocating motion.

Transverse motion (movement in a straight, continuous line) creates a hazard because a worker may be struck or caught in a pinch or shear point by the moving part. See Figure 6.

Actions

Cutting action involves rotating, reciprocating, or transverse motion. The danger of cutting action exists at the point of operation where finger, head, and arm injuries can occur and where flying chips or scrap material can strike the eyes or face. Such hazards are present at the point of operation in cutting wood, metal, or other materials. Typical examples of mechanisms in-

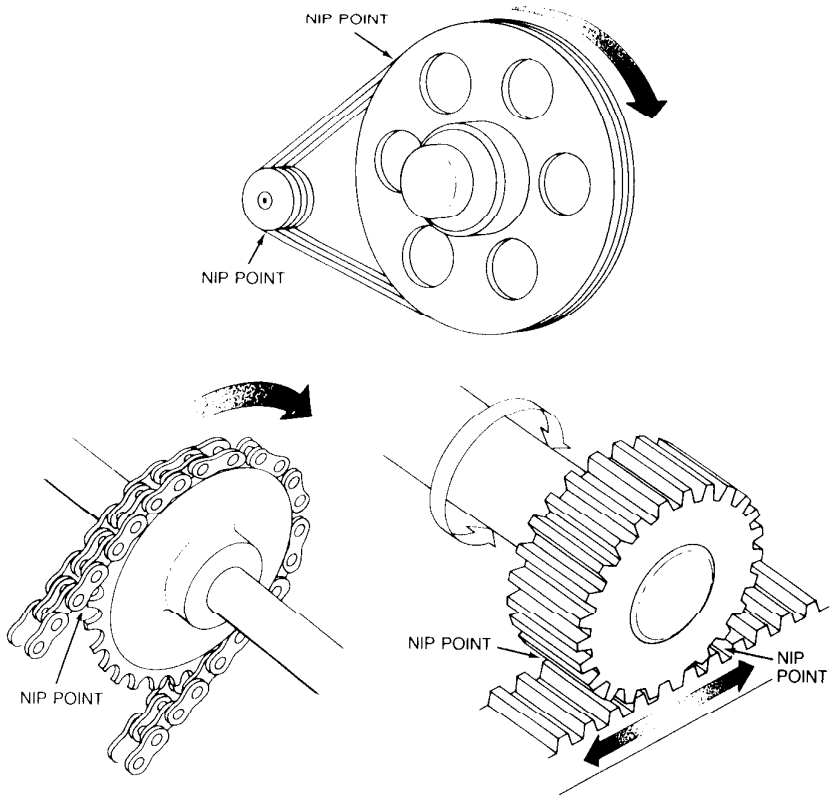

Figure 3.

volving cutting hazards include bandsaws, circular saws, boring or drilling machines, turning machines (lathes), or milling machines. See Figure 7.

Punching action results when power is applied to a slide (ram) for the purpose of blanking, drawing, or stamping metal or other materials. The danger of this type of action occurs at the point of operation where stock is inserted, held, and withdrawn by hand.

Typical machinery used for punching operations are power presses and iron workers. See Figure 8.

Shearing action involves applying power to a slide or knife in order to trim or shear metal or other materials. A hazard occurs at the point of operation where stock is actually inserted, held, and withdrawn.

Typical examples of machinery used for shearing operations are mechanically, hydraulically, or pneumatically powered shears. See Figure 9.

Bending action results when power is applied to a slide in order

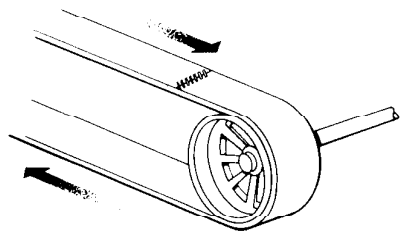

Figure 6.

Figure 7.

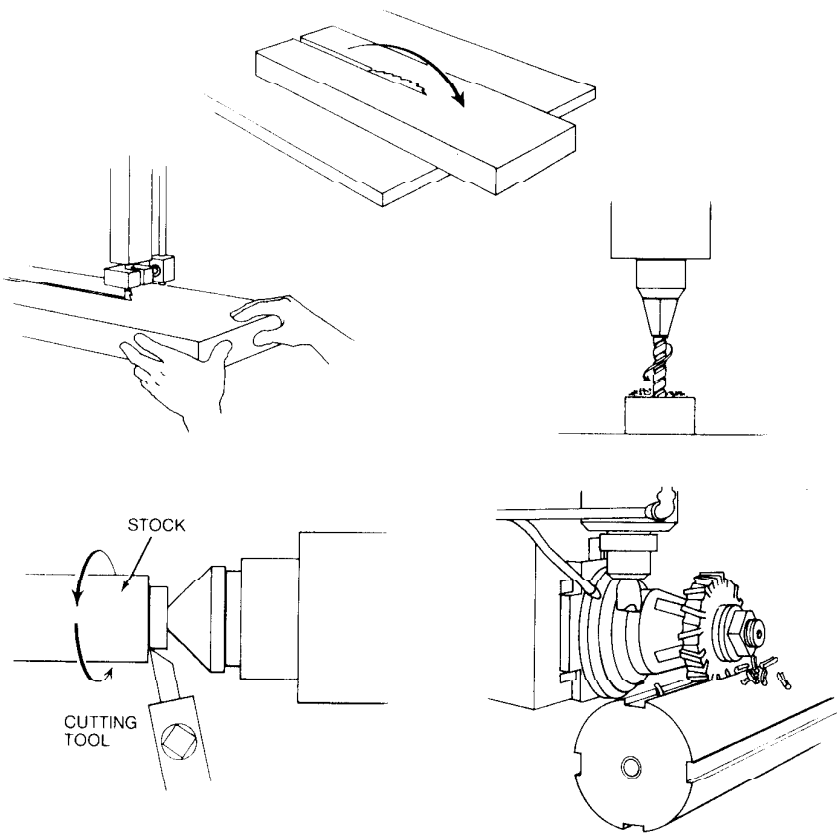

to draw or stamp metal or other materials, and a hazard occurs at the point of operation where stock is inserted, held, and withdrawn.

Equipment that uses bending action includes power presses, press brakes, and tubing benders. See Figure 10.

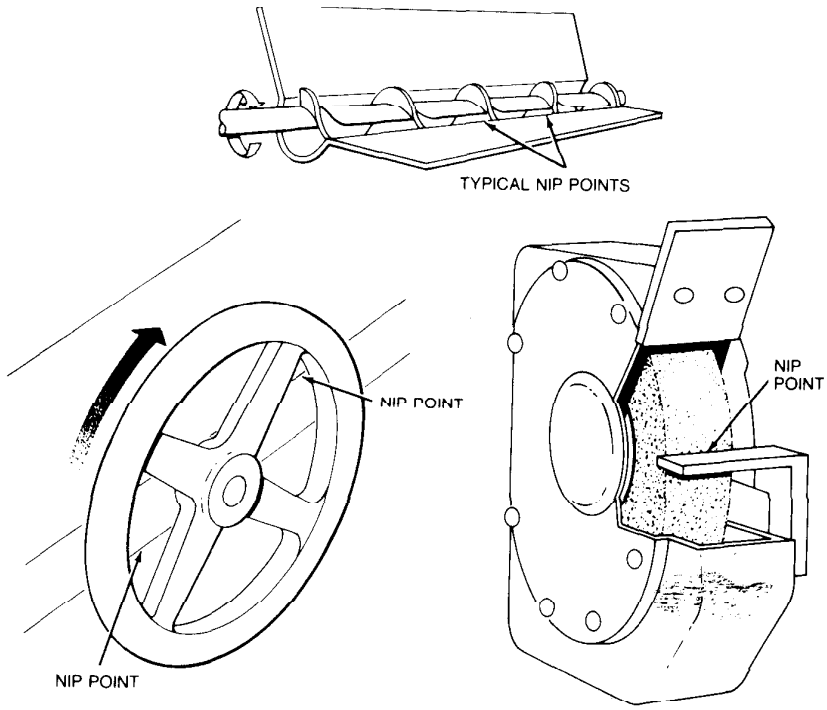

Figure 4.

Figure 5.

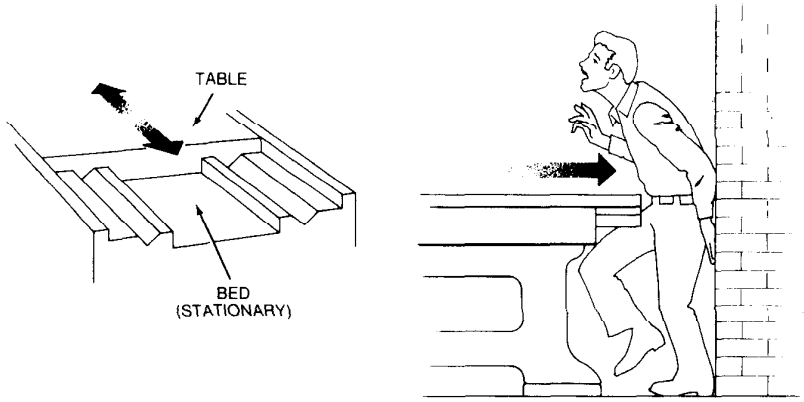

Secure: Workers should not be able to easily remove or tamper with the safeguard, because a safeguard that can easily be made ineffective is no safeguard at all. Guards and safety devices should be made of durable material that will withstand the conditions of normal use. They must be firmly secured to the machine.

Protect from falling objects: The safeguard should ensure that no objects can fall into moving parts. A small tool which is dropped into a cycling machine could easily become a projectile that could strike and injure someone.

Create no new hazards: A safeguard defeats its own purpose if it creates a hazard of its own such as a shear point, a jagged edge, or an unfinished surface which can cause a laceration. The edges of guards, for instance, should be rolled or bolted in such a way that they eliminate sharp edges.

Create no interference: Any safeguard which impedes a worker from performing the job quickly and comfortably might soon be overridden or disregarded. Proper safeguarding can actually enhance efficiency since it can relieve the worker's apprehensions about injury.

Allow safe lubrication: If possible, one should be able to lubricate the machine without removing the safeguards. Locating oil reservoirs outside the guard, with a line leading to the lubrication point, will reduce the need for the operator or maintenance worker to enter the hazardous area.

Nonmechanical Hazards

While this manual concentrates attention on concepts and techniques for safeguarding mechanical motion, machines obviously present a variety of other hazards which cannot be ignored. Full discussion of these matters is beyond the scope of this publication, but some nonmechanical hazards are briefly mentioned below to remind the reader of things other than safeguarding moving parts which can affect the safe operation of machinery.

All power sources for machinery are potential sources of danger. When using electrically powered or controlled machines, for instance, the equipment as well as the electrical system itself must be properly grounded. Replacing frayed, exposed, or old wiring will also help to protect the operator and others from electrical shocks or electrocution. High pressure systems, too, need careful inspection and maintenance to prevent possible failure from pulsation, vibration, or leaks. Such a failure could cause explosions or flying objects.

Machines often produce noise (unwanted sound) and this can result in a number of hazards to workers. Not only can it startle and disrupt concentration, but it can interfere with communications, thus hindering the worker's safe job performance. Research

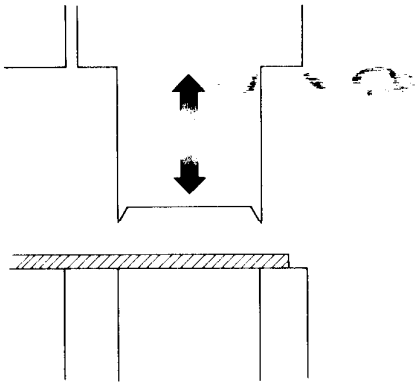

Figure 8.

Requirements for Safeguards

What must a safeguard do to protect workers against mechanical hazards? Safeguards must meet these minimum general requirements:

Prevent contact: The safeguard must prevent hands, arms, or any other part of a worker's body from making contact with dangerous moving parts. A good safeguarding system eliminates the possibility of the operator or another worker placing their hands near hazardous moving parts.

Figure 9. Shearing

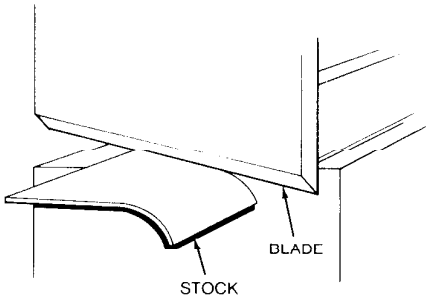

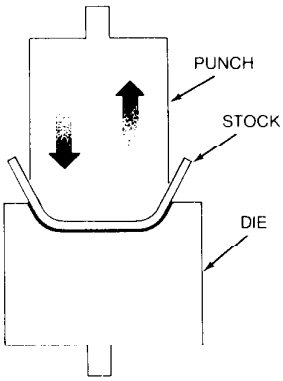

Figure 10. Bending

offer the best and most reliable means of safeguarding. Therefore, engineering controls must be the employer's first choice for eliminating machinery hazards. But whenever an extra measure of protection is necessary, operators must wear protective clothing or personal protective equipment.

If it is to provide adequate protection, the protective clothing and equipment selected must always be:

(1) appropriate for the particular hazards;
(2) maintained in good condition;
(3) properly stored when not in use, to prevent damage or loss; and
(4) kept clean and sanitary.

Protective clothing is, of course, available for different parts of the body. Hard hats can protect the head from the impact of bumps and falling objects when the worker is handling stock; caps and hair nets can help keep the worker's hair from being caught in machinery. If machine coolants could splash or particles could fly into the operator's eyes or face, then face shields, safety goggles, glasses, or similar kinds of protection might be necessary. Hearing protection may be needed when workers operate noisy machinery. To guard the trunk of the body from cuts or impacts from heavy or rough-edged stock, there are certain protective coveralls, jackets, vests, aprons, and full-body suits. Workers can protect their hands and arms from the same kinds of injury with special sleeves and gloves. And safety shoes and boots, or other acceptable foot guards, can shield the feet against injury in case the worker needs to handle heavy stock which might drop.

It is important to note that protective clothing and equipment themselves can create hazards. A protective glove which can become caught between rotating parts, or a respirator facepiece which hinders the wearer's vision, for example, require alertness and careful supervision whenever they are used.

Other aspects of the worker's dress may present additional safety hazards. Loose-fitting clothing might possibly become entangled in rotating spindles or other kinds of moving machinery. Jewelry, such as bracelets and rings, can catch on machine parts or stock and lead to serious injury by pulling a hand into the danger area.

has linked noise to a whole range of harmful health effects, from hearing loss and aural pain to nausea, fatigue, reduced muscle control, and emotional disturbances. Engineering controls such as the use of sound-dampening materials, as well as less sophisticated hearing protection, such as ear plugs and muffs, have been suggested as ways of controlling the harmful effects of noise. Vibration, a related hazard which can cause noise and thus result in fatigue and illness for the worker, may be avoided if machines are properly aligned, supported, and, if necessary, anchored.

Because some machines require the use of cutting fluids, coolants, and other potentially harmful substances, operators, maintenance workers, and others in the vicinity may need protection. These substances can cause ailments ranging from dermatitis to serious illnesses and disease. Specially constructed safeguards, ventilation, and protective equipment and clothing are possible temporary solutions to the problem of machinery-related chemical hazards until these hazards can be better controlled or eliminated from the workplace.

Training

Even the most elaborate safeguarding system cannot offer effective protection unless the worker knows how to use it and why. Specific and detailed training is therefore a crucial part of any effort to provide safeguarding against machine-related hazards. Thorough operator training should involve instruction or hands-on training in the following:

(1) a description and identification of the hazards associated with particular machines;
(2) the safeguards themselves, how they provide protection, and the hazards for which they are intended;
(3) how to use the safeguards and why;
(4) how and under what circumstances safeguards can be removed, and by whom (in most cases, repair or maintenance personnel only); and
(5) what to do (e.g., contact the supervisor) if a safeguard is damaged, missing, or unable to provide adequate protection.

This kind of safety training is necessary for new operators and maintenance or setup personnel, when any new or altered safeguards are put in service, or when workers are assigned to a new machine or operation.

Protective Clothing and Personal Protective Equipment

Engineering controls, which eliminate the hazard at the source and do not rely on the worker's behavior for their effectiveness,

5. Miscellaneous Aids
   A. Awareness barriers
   B. Miscellaneous protective shields
   C. Hand-feeding tools and holding fixtures

Guards

Guards are barriers which prevent access to danger areas. There are four general types of guards:

Fixed: As its name implies, a fixed guard is a permanent part of the machine. It is not dependent upon moving parts to perform its intended function. It may be constructed of sheet metal, screen, wire cloth, bars, plastic, or any other material that is substantial enough to withstand whatever impact it may receive and to endure prolonged use. This guard is usually preferable to all other types because of its relative simplicity and permanence.

Examples of fixed guards . . .

In Figure 11, a fixed guard on a power press completely encloses the point of operation. The stock is fed through the side of the

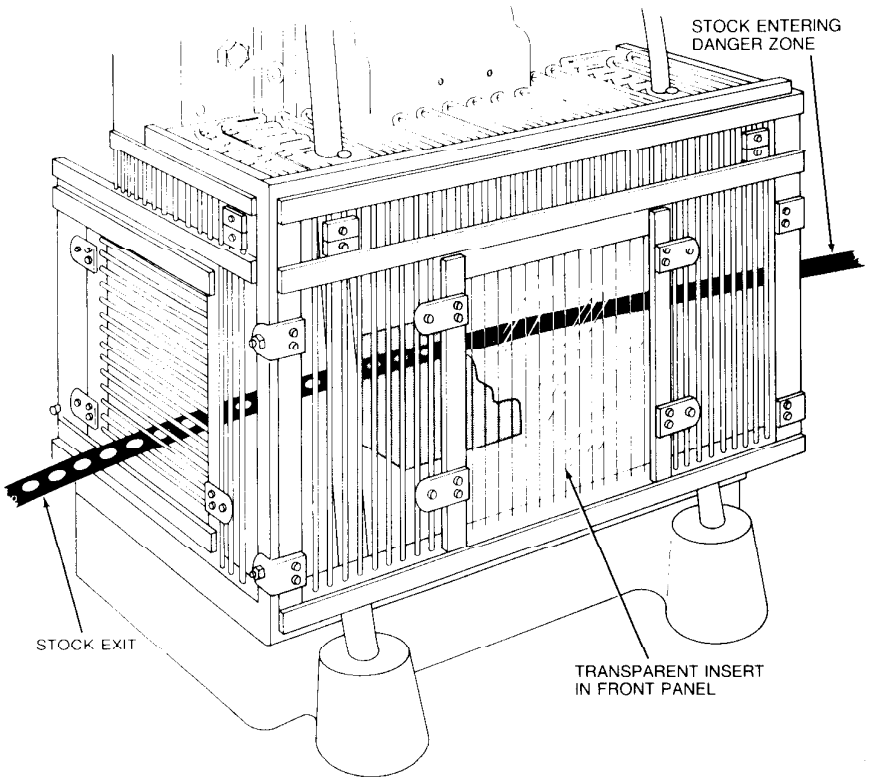

Figure 11.
Fixed guard on power press

Chapter 2

Methods of Machine Safeguarding

There are many ways to safeguard machinery. The type of operation, the size or shape of stock, the method of handling, the physical layout of the work area, the type of material, and production requirements or limitations will help to determine the appropriate safeguarding method for the individual machine.

As a general rule, power transmission apparatus is best protected by fixed guards that enclose the danger area. For hazards at the point of operation, where moving parts actually perform work on stock, several kinds of safeguarding are possible. One must always choose the most effective and practical means available.

We can group safeguards under five general classifications.

1. Guards
   - A. Fixed
   - B. Interlocked
   - C. Adjustable
   - D. Self-adjusting
2. Devices
   - A. Presence Sensing
     - (1) Photoelectrical (optical)
     - (2) Radiofrequency (capacitance)
     - (3) Electromechanical
   - B. Pullback
   - C. Restraint
   - D. Safety Controls
     - (1) Safety trip control
       - (a) Pressure-sensitive body bar
       - (b) Safety triprod
       - (c) Safety tripwire cable
     - (2) Two-hand control
     - (3) Two-hand trip
   - E. Gates
     - (1) Interlocked
     - (2) Other
3. Location/Distance
4. Potential Feeding and Ejection Methods to Improve Safety for the Operator
   - A. Automatic feed
   - B. Semi-automatic feed
   - C. Automatic ejection
   - D. Semi-automatic ejection
   - E. Robot

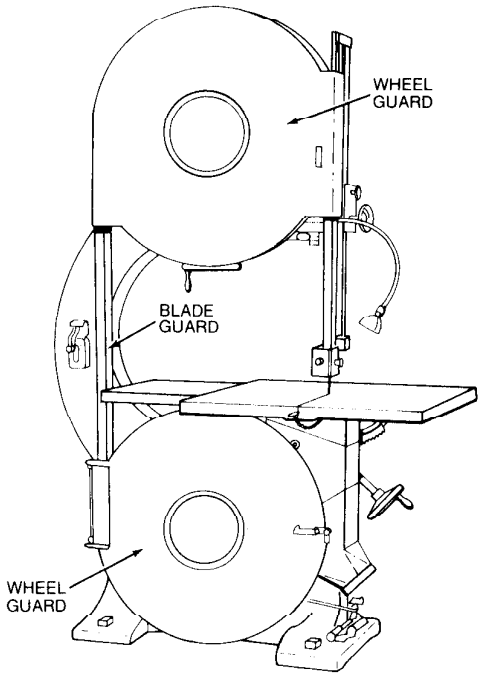

Figure 14.
Fixed guards on a bandsaw

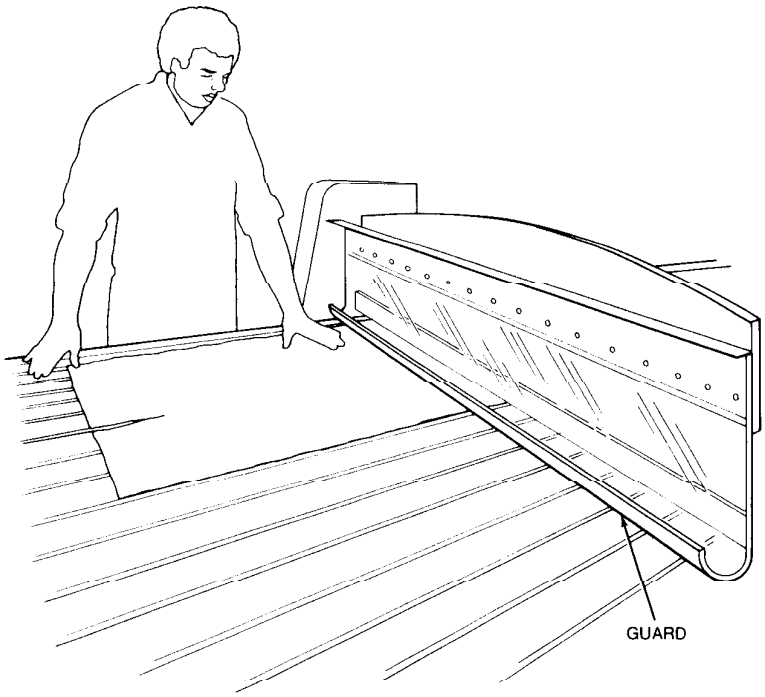

Figure 15.
Fixed guard on veneer clipper

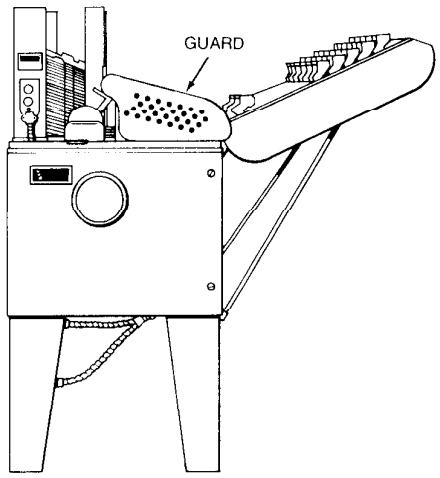

Figure 12. Fixed guard on egg carton folding machine

guard into the die area, with the scrap stock exiting on the opposite side.

Figure 12 shows a fixed guard that protects the operator from a mechanism that folds cartons. This guard would not normally be removed except to perform maintenance on the machine. Figure 13 shows a fixed enclosure guard shielding the belt and pulley of a power transmission unit. An inspection panel is provided on top in order to minimize the need for removing the guard.

In Figure 14, fixed enclosure guards are shown on a bandsaw. These guards protect the operator from the turning wheels and moving saw blade. Normally, the only time for the guards to be opened or removed would be for a blade change or maintenance. It is very important that they be securely fastened while the saw is in use.

A fixed guard is shown on a veneer clipper in Figure 15. This guard acts as a barrier, protecting fingers from exposure to the blade. Note the side view of the curved portion of the guard.

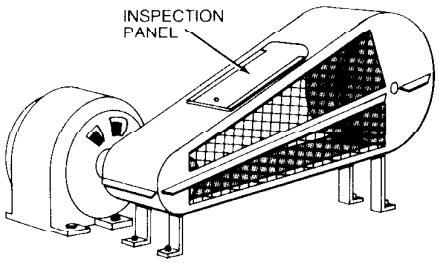

Figure 13. Fixed guard enclosing belt and pulleys

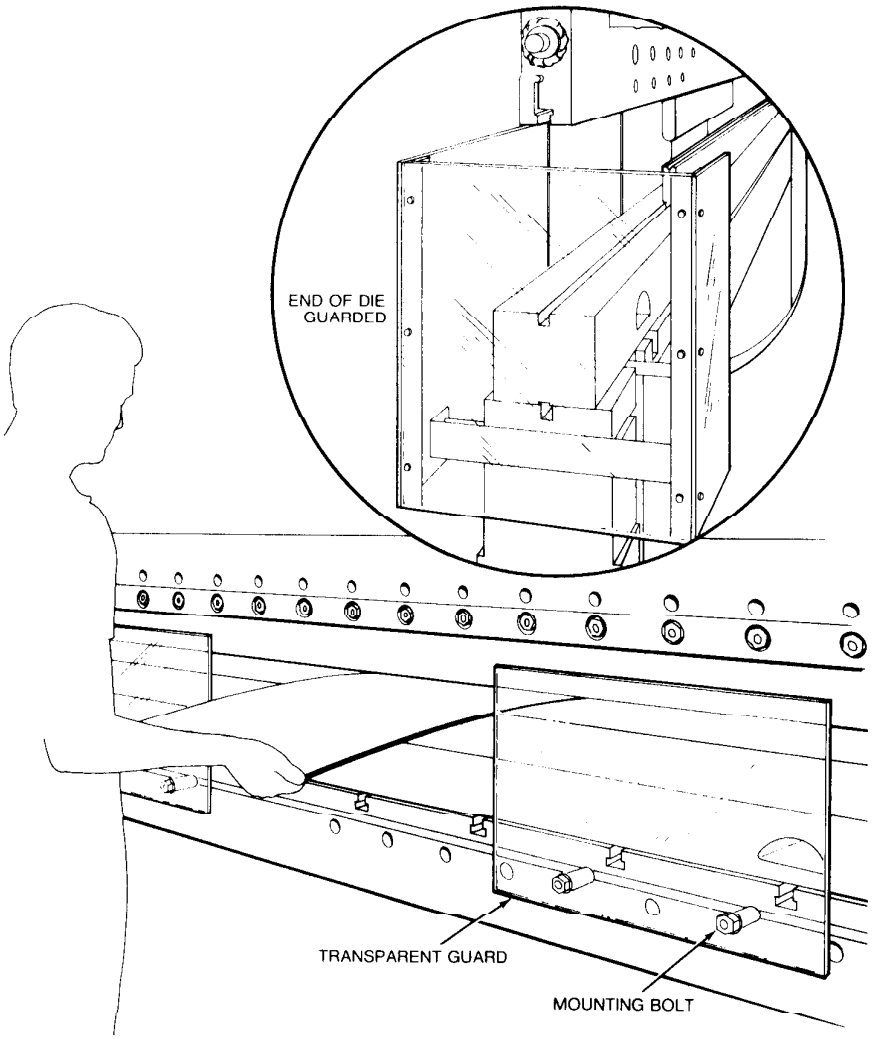

Figure 17.
Fixed guard providing protection from unused portion of die on a press brake

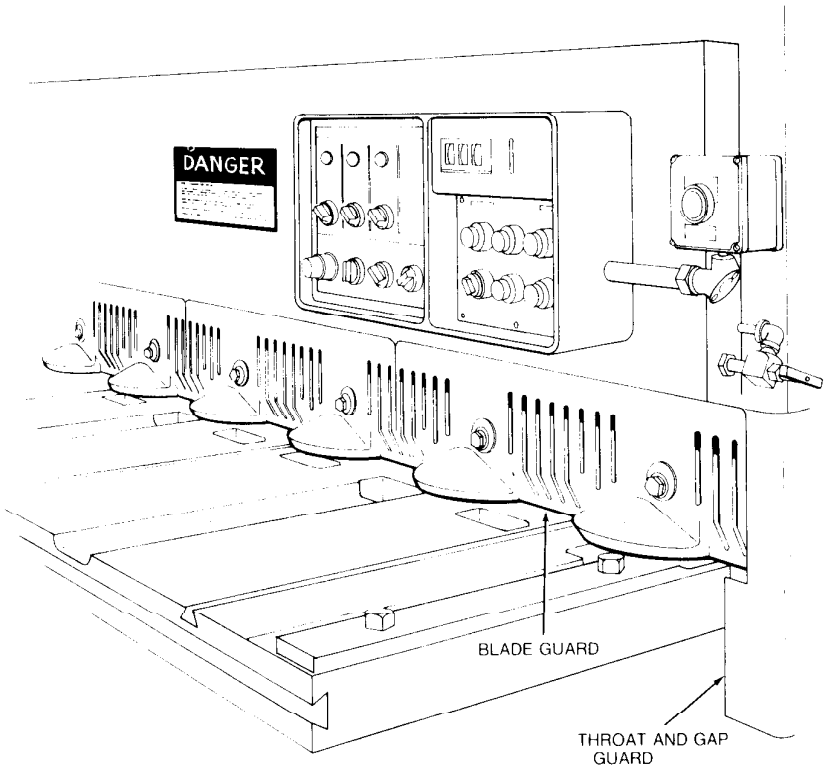

Figure 16. Fixed guard on a power squaring shear

Figure 16 shows both a fixed blade guard and a throat and gap guard on a power squaring shear. These guards should be removed only for maintenance or blade changes.

In Figure 17, a transparent, fixed barrier guard is being used on a press brake to protect the operator from the unused portions of the die. This guard is relatively easy to install or remove.

Interlocked: When this type of guard is opened or removed, the tripping mechanism and/or power automatically shuts off or disengages, and the machine cannot cycle or be started until the guard is back in place.

An interlocked guard may use electrical, mechanical, hydraulic, or pneumatic power or any combination of these. Interlocks should not prevent "inching" by remote control if required. Replacing the guard should not automatically restart the machine.

Examples of interlocking guards . . .

Figure 18 shows a corn cutter with an interlocked panel that acts as a barrier guard, preventing the operator from putting his or her

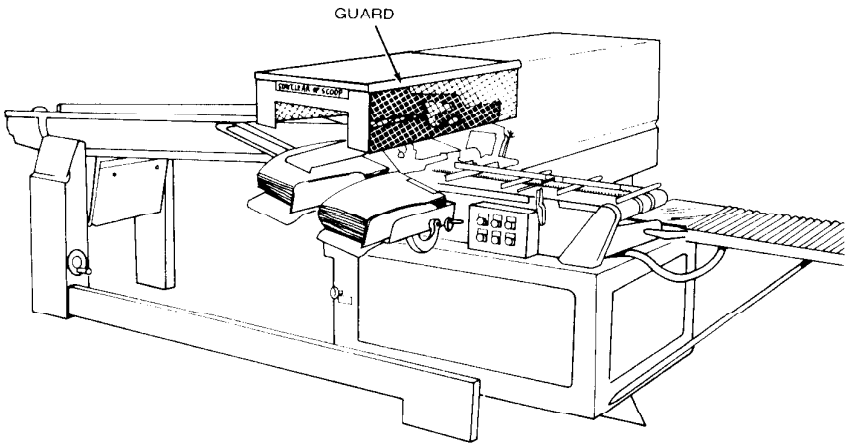

Figure 19.
Interlocked guard on automatic bread bagging machine

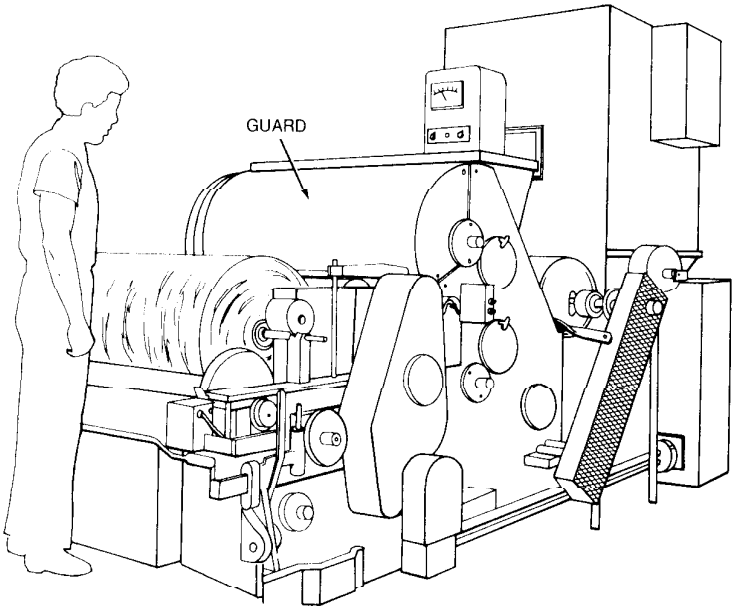

Figure 20.
Interlocked guard on picker machine

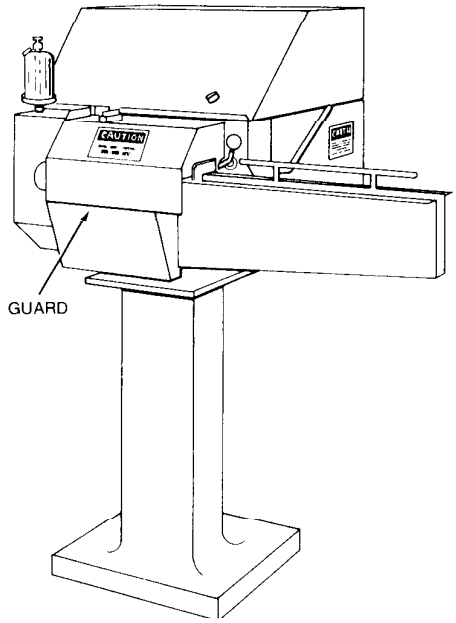

Figure 18. Interlocked guard on corn cutter

hands into the fast-turning cutter blades as the corn is being stripped from the cob. If the guard is opened or removed while the machine is running, the power disengages and a braking mechanism stops the blades before a hand can reach into the danger area.

Figure 19 shows an interlocked barrier guard mounted on an automatic bread bagging machine. When the guard is removed, the machine will not function.

In Figure 20, the beater mechanism of a picker machine (used in the textile industry) is covered by an interlocked barrier guard. This guard cannot be raised while the machine is running, nor can the machine be restarted with the guard in the raised position.

In Figure 21, an interlocked guard covers the rotating cylinder of the dividing head of a roll make-up machine used for making hamburger and hot dog rolls.

Adjustable: Adjustable guards are useful because they allow flexibility in accommodating various sizes of stock.

Figure 22 shows a bandsaw with an adjustable guard to protect the operator from the unused portion of the blade. This guard can be adjusted according to the size of stock.

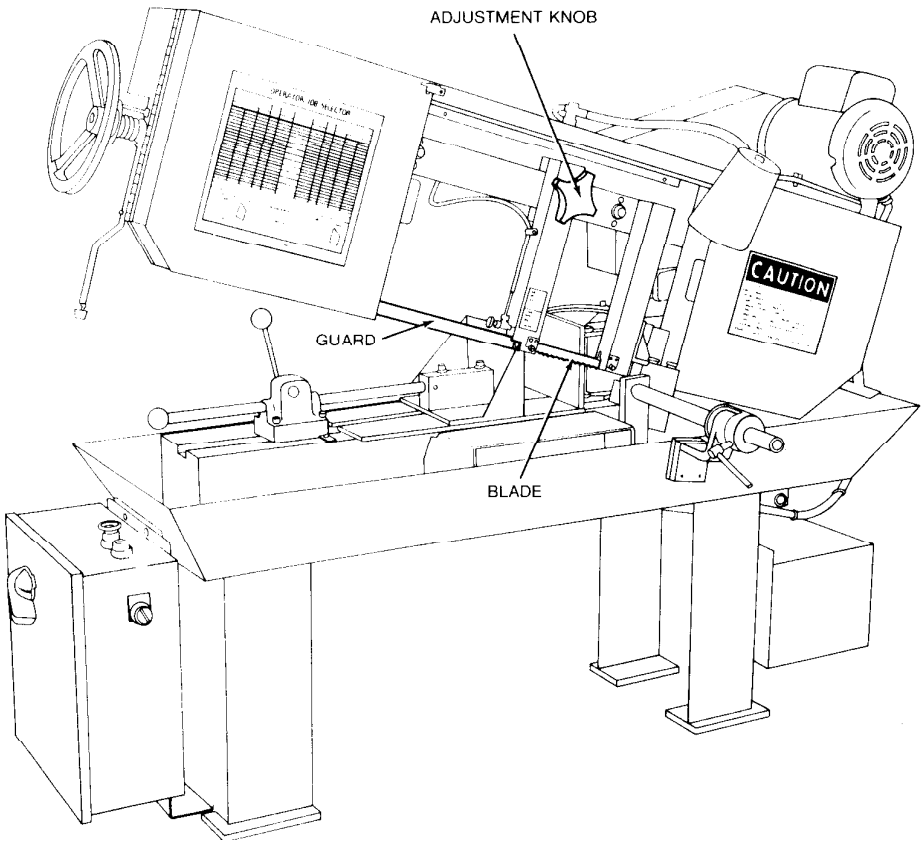

Figure 22.
Adjustable guard on horizontal bandsaw

In Figure 23, the bars adjust to accommodate the size and shape of the stock. Figures 24 and 25 show guards that can be adjusted according to the thickness of the stock.

In Figure 26, the guard adjusts to provide a barrier between the operator and the blade.

Figure 27 shows an adjustable enclosure guard on a bandsaw.

Self-Adjusting: The openings of these barriers are determined by the movement of the stock. As the operator moves the stock into the danger area, the guard is pushed away, providing an opening which is only large enough to admit the stock. After the stock is removed, the guard returns to the rest position. This guard protects the operator by placing a barrier between the danger area and the operator. The guards may be constructed of plastic, metal, or other substantial material. Self-adjusting guards offer different degrees of protection.

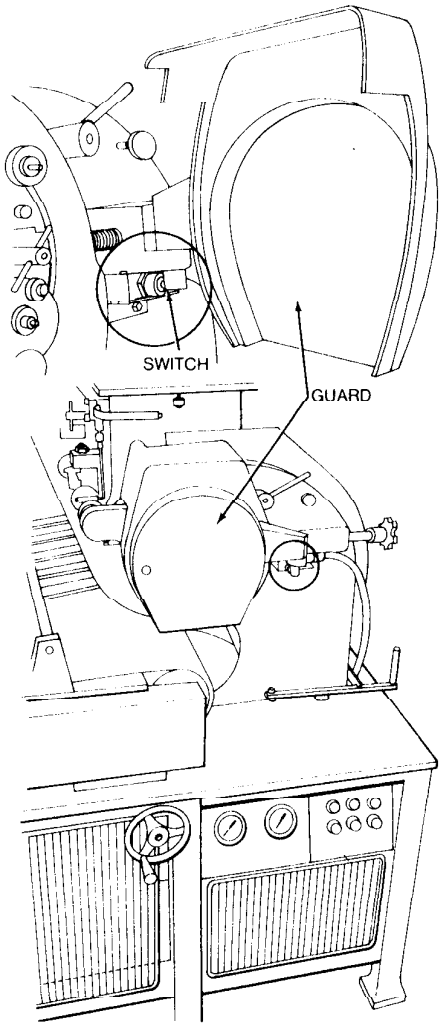

Figure 21. Interlocked guard on roll make-up machine

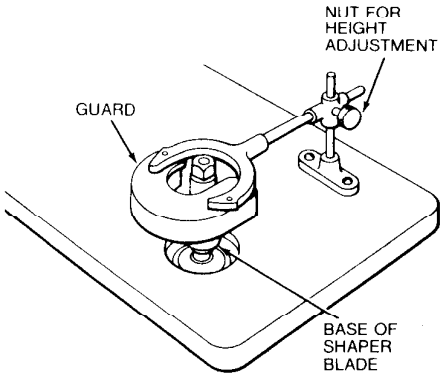

Figure 25.
Adjustable guard on shaper

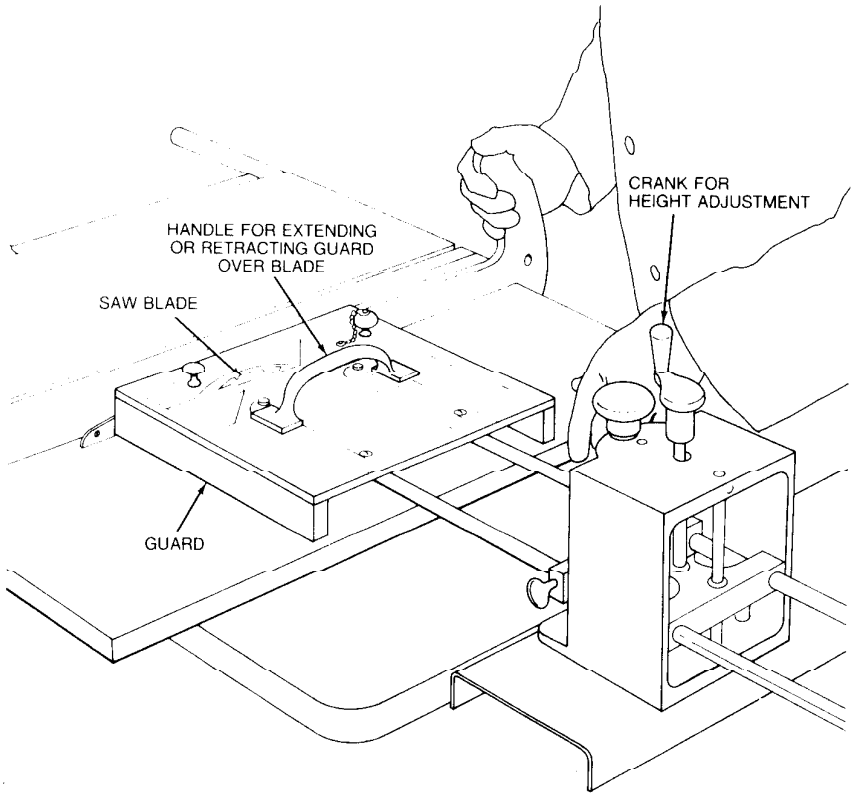

Figure 26.
Adjustable guard on table saw

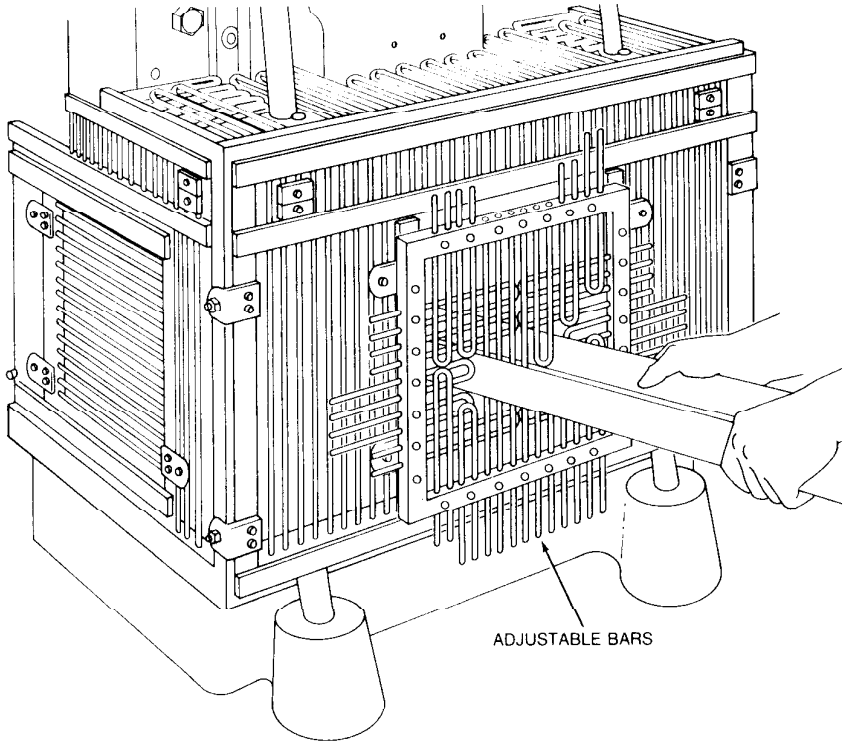

Figure 23. Adjustable guard on power press

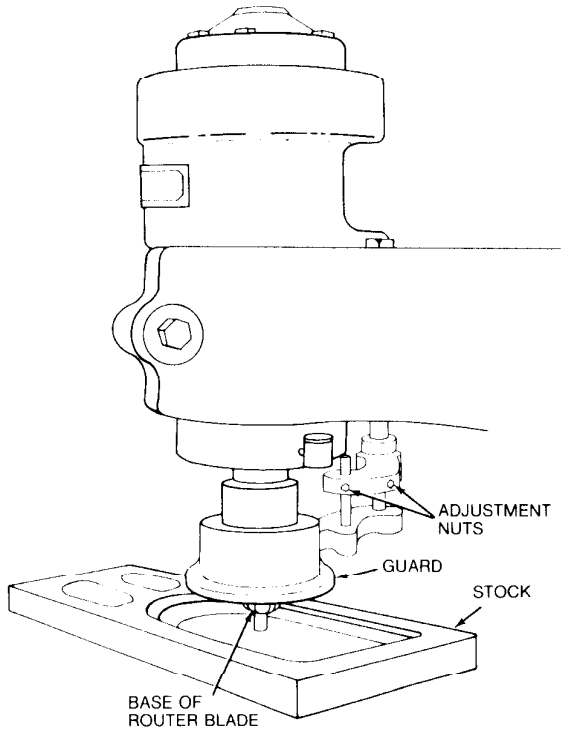

Figure 24. Adjustable guard on router

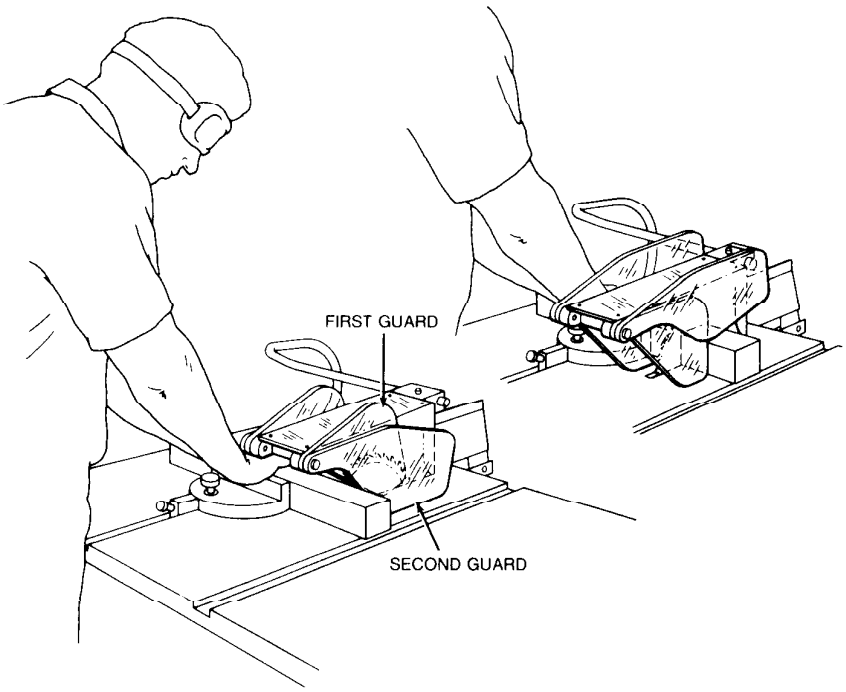

Figure 29. Self-adjusting guard on table saw

Examples of self-adjusting guards . . .

Figure 28 shows a radial arm saw with a self-adjusting guard. As the blade is pulled across the stock, the guard moves up, staying in contact with the stock.

Figure 29 shows a twin-action, transparent, self-adjusting guard. The first guard rises as the stock enters, then returns to its rest position as the stock moves ahead to raise the second guard.

A self-adjusting guard is shown in Figure 30. As the blade moves through the stock, the guard rises up to the stock surface.

Figure 31 shows a self-adjusting enclosure guard mounted on a jointer. This guard is moved from the cutting head by the stock. After the stock is removed, the guard will return, under spring tension, to the rest position.

Another type of self-adjusting guard mounted on a jointer is illustrated in Figure 32. The guard moves two ways. An edging operation causes the guard to move horizontally. If the stock is wide enough during a surfacing operation, the stock may be fed under the guard, causing it to move vertically.

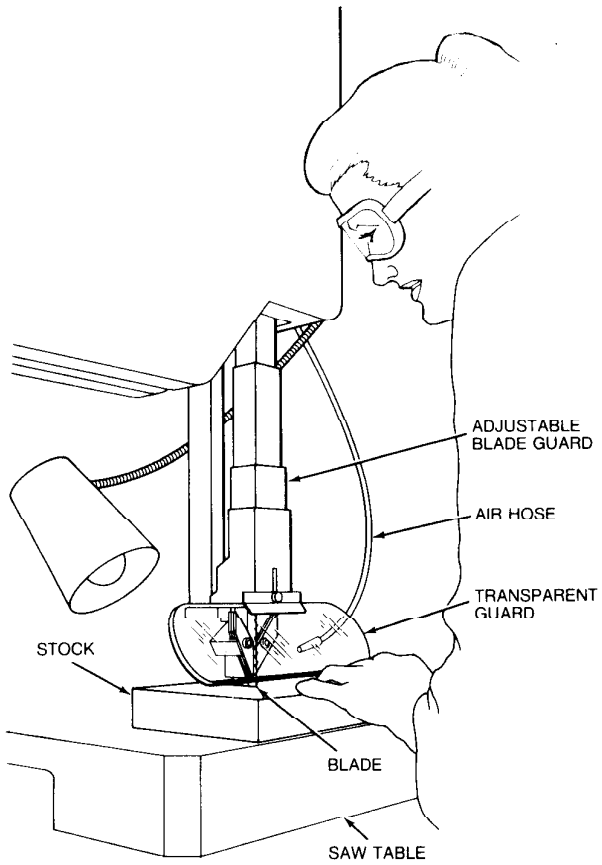

Figure 27. Adjustable guard on bandsaw

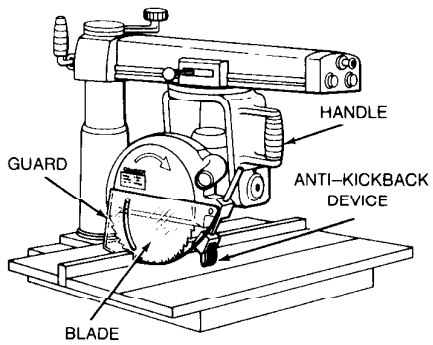

Figure 28. Self-adjusting guard on radial arm saw

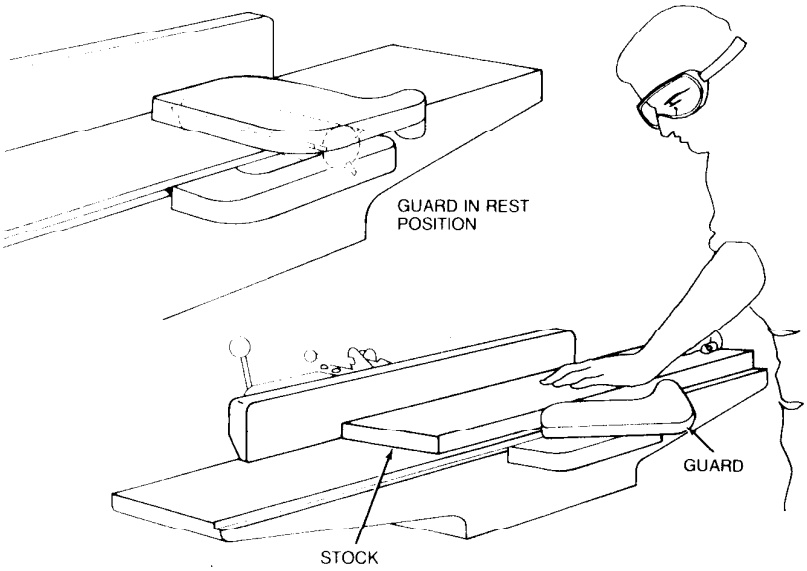

Figure 31.
Self-adjusting guard on a jointer

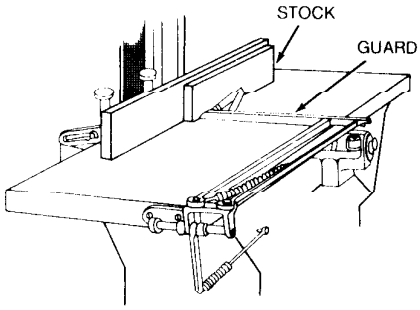

Figure 32.
Self-adjusting guard on a jointer

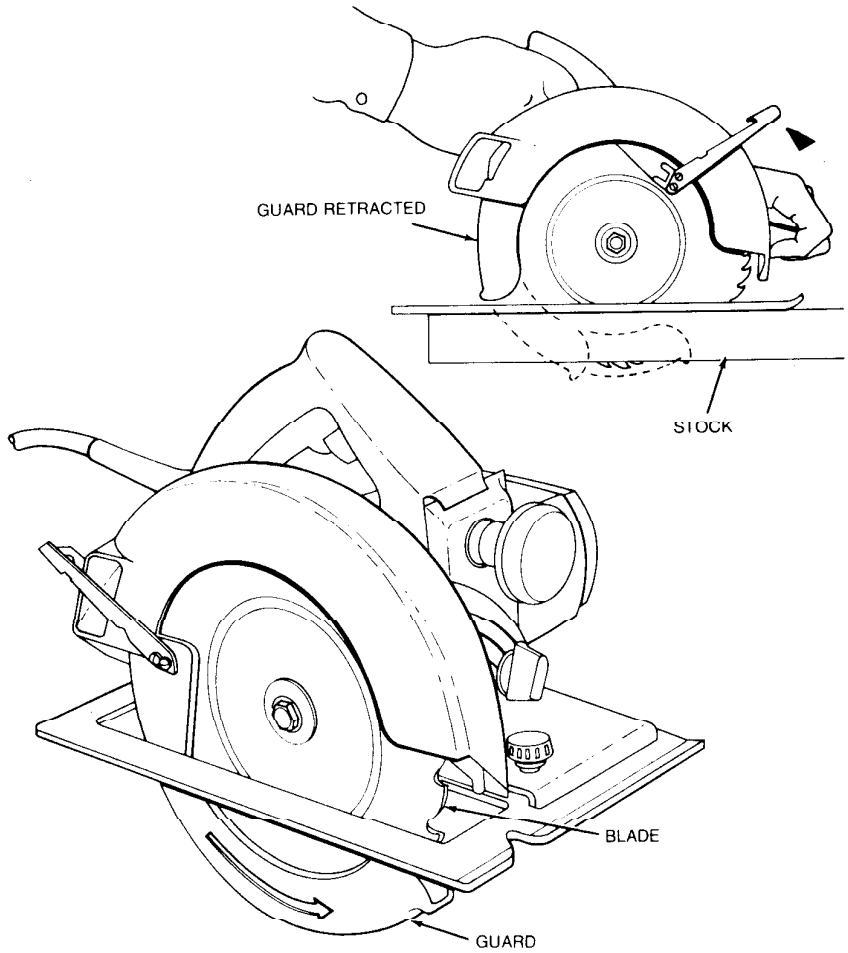

Figure 30.
Self-adjusting guard on circular saw

Devices

A safety device may perform one of several functions. It may: stop the machine if a hand or any part of the body is inadvertently placed in the danger area; restrain or withdraw the operator's hands from the danger area during operation; require the operator to use both hands on machine controls, thus keeping both hands and body out of danger; or provide a barrier which is synchronized with the operating cycle of the machine in order to prevent entry to the danger area during the hazardous part of the cycle.

Presence-Sensing

The *photoelectric* (optical) presence-sensing device uses a system of light sources and controls which can interrupt the machine's operating cycle. If the light field is broken, the machine stops and will not cycle. This device must be used only on machines which can be stopped before the worker can reach the danger area.

Figure 33 shows a photoelectric presence-sensing device on a part-revolution power press. When the light beam is broken, either the ram will not start to cycle, or, if the press is already functioning, the stopping mechanism will be activated.

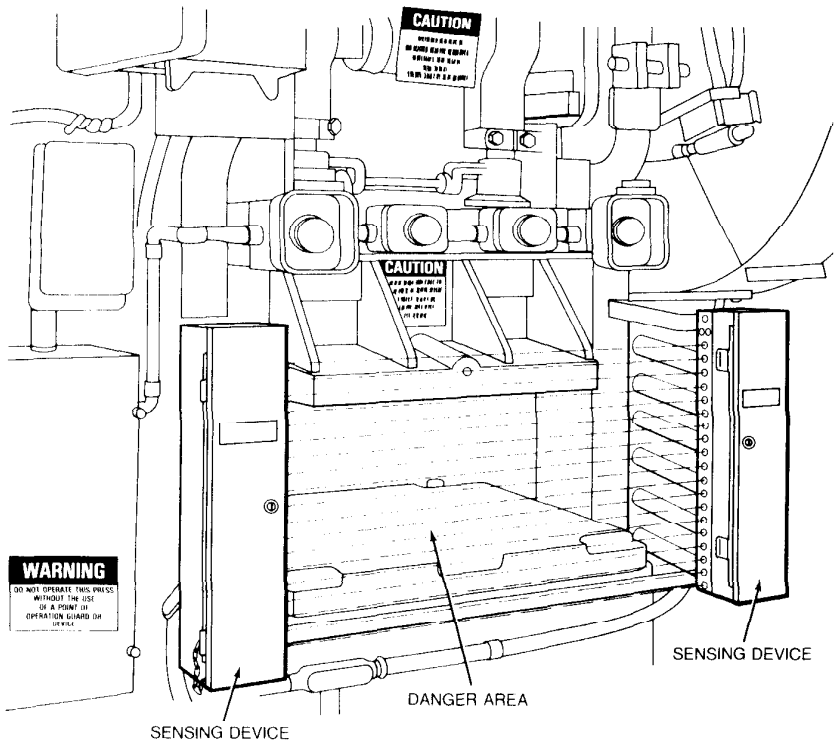

Figure 33. Photoelectric presence-sensing device on power press

GUARDS

Method	Safeguarding Action	Advantages	Limitations
Fixed	Provides a barrier	Can be constructed to suit many specific applications In-plant construction is often possible Can provide maximum protection Usually requires minimum maintenance Can be suitable to high production, repetitive operations	May interfere with visibility Can be limited to specific operations Machine adjustment and repair often require its removal, thereby necessitating other means of protection for maintenance personnel
Interlocked	Shuts off or disengages power and prevents starting of machine when guard is open; should require the machine to be stopped before the worker can reach into the danger area	Can provide maximum protection Allows access to machine for removing jams without time-consuming removal of fixed guards	Requires careful adjustment and maintenance May be easy to disengage
Adjustable	Provides a barrier which may be adjusted to facilitate a variety of production operations	Can be constructed to suit many specific applications Can be adjusted to admit varying sizes of stock	Hands may enter danger area—protection may not be complete at all times May require frequent maintenance and/or adjustment The guard may be made ineffective by the operator May interfere with visibility
Self-adjusting	Provides a barrier which moves according to the size of the stock entering danger area	Off-the-shelf guards are often commercially available	Does not always provide maximum protection May interfere with visibility May require frequent maintenance and adjustment

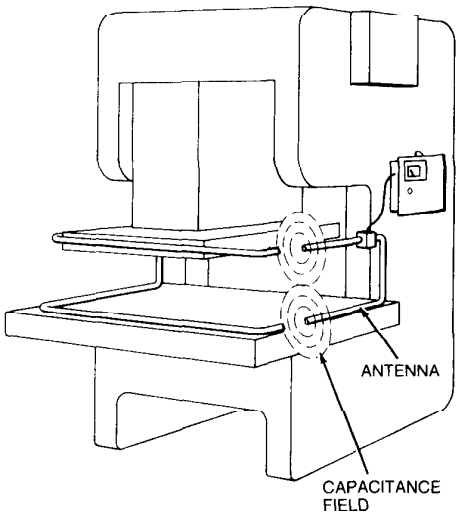

Figure 35.
Radiofrequency presence-sensing device on a power press

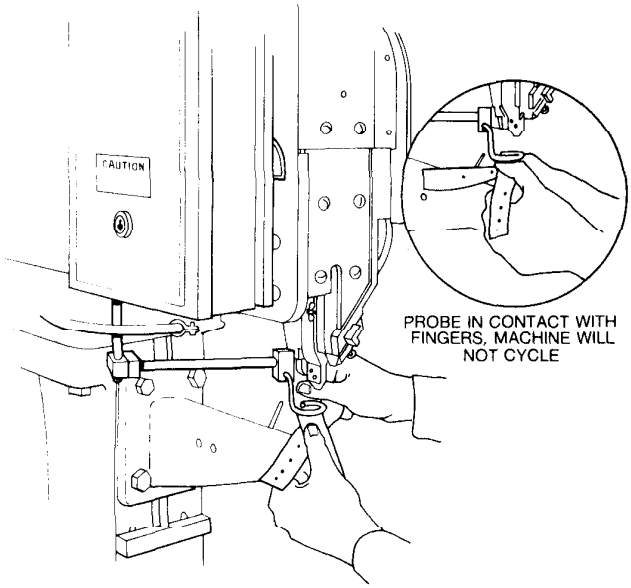

Figure 36.
Electromechanical sensing device on an eyeletter

A photoelectric presence-sensing device used with a press brake is illustrated in Figure 34. The device may be swung up or down to accommodate different production requirements.

The *radiofrequency* (capacitance) presence-sensing device uses a radio beam that is part of the machine control circuit. When the capacitance field is broken, the machine will stop or will not activate. Like the photoelectric device, this device shall only be used on machines which can be stopped before the worker can reach the danger area. This requires the machine to have a friction clutch or other reliable means for stopping.

Figure 35 shows a radiofrequency presence-sensing device mounted on a part-revolution power press.

The *electromechanical* sensing device has a probe or contact bar which descends to a predetermined distance when the operator initiates the machine cycle. If there is an obstruction preventing it from descending its full predetermined distance, the control circuit does not actuate the machine cycle.

Figure 36 shows an electromechanical sensing device on an eyeletter. The sensing probe in contact with the operator's finger is also shown.

Figure 34.
Photoelectric presence-sensing device on press brake

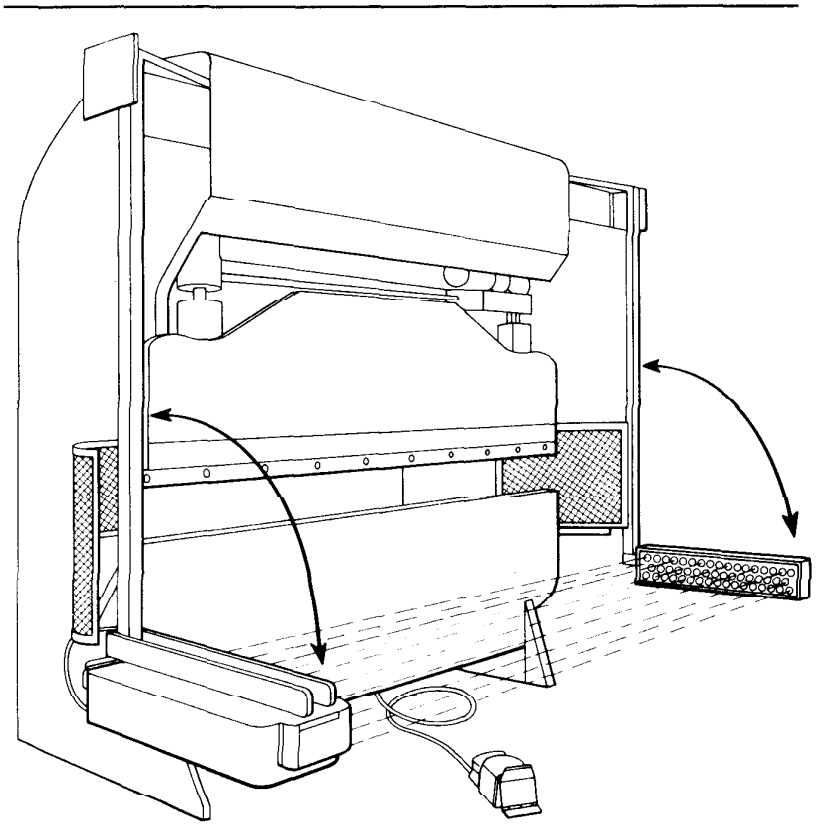

Restraint

The restraint (holdout) device in Figure 40 utilizes cables or straps that are attached to the operator's hands and a fixed point. The cables or straps must be adjusted to let the operator's hands travel within a predetermined safe area. There is no extending or retracting action involved. Consequently, hand-feeding tools are often necessary if the operation involves placing material into the danger area.

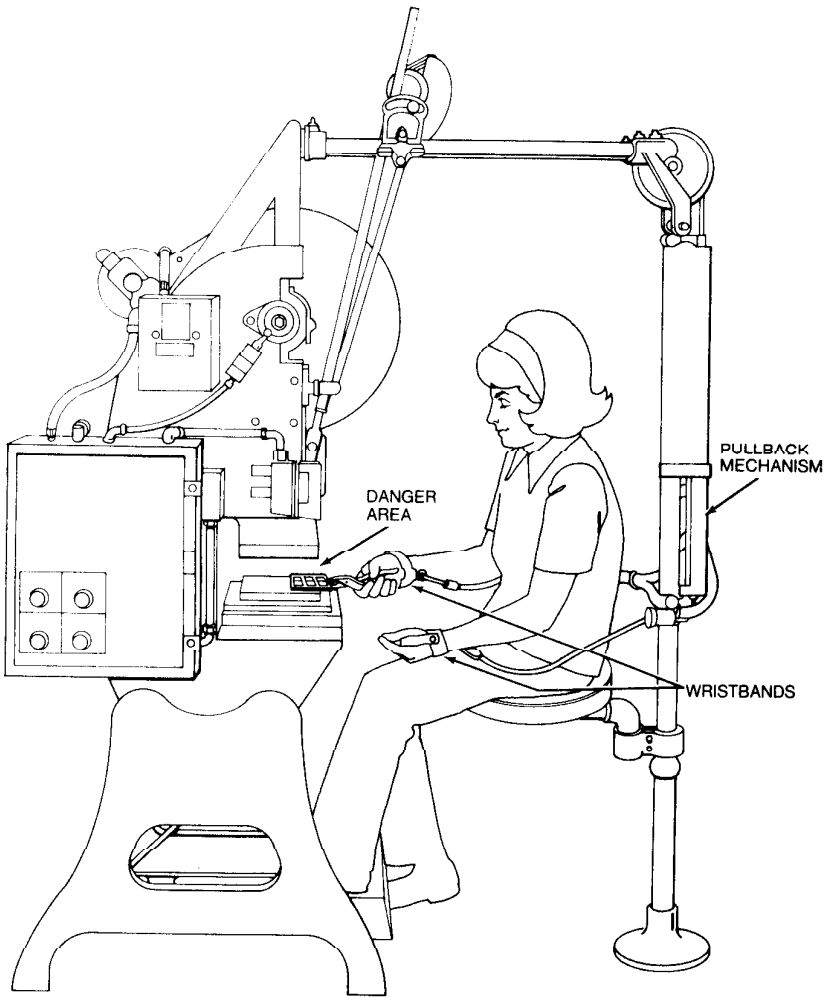

Figure 38. Pullback device on a power press

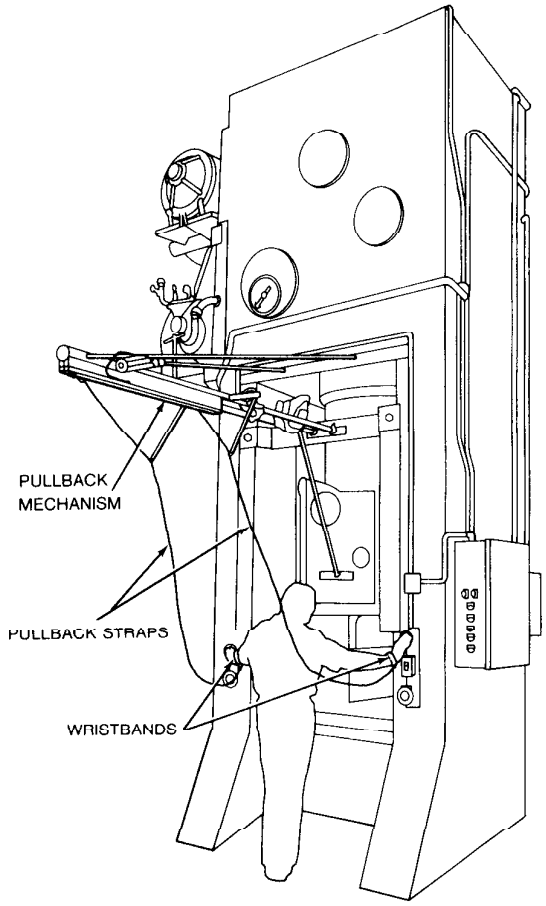

Figure 37. Pullback device on a power press

Pullback

Pullback devices utilize a series of cables attached to the operator's hands, wrists, and/or arms. This type of device is primarily used on machines with stroking action. When the slide/ram is up, the operator is allowed access to the point of operation. When the slide/ram begins to descend, a mechanical linkage automatically assures withdrawal of the hands from the point of operation.

Figure 37 shows a pullback device on a straight-side power press. When the slide/ram is in the "up" position, the operator can feed material by hand into the point of operation. When the press cycle is actuated, the operator's hands and arms are automatically withdrawn. Figure 38 shows a pullback device on a small press.

A pullback device on a press brake is illustrated in Figure 39.

Safety Trip Controls

Safety trip controls provide a quick means for deactivating the machine in an emergency situation.

A pressure-sensitive body bar, when depressed, will deactivate the machine. If the operator or anyone trips, loses balance, or is drawn into the machine, applying pressure to the bar will stop the operation. The positioning of the bar, therefore, is critical. Figure 41 shows a pressure-sensitive body bar located on the front of a rubber mill.

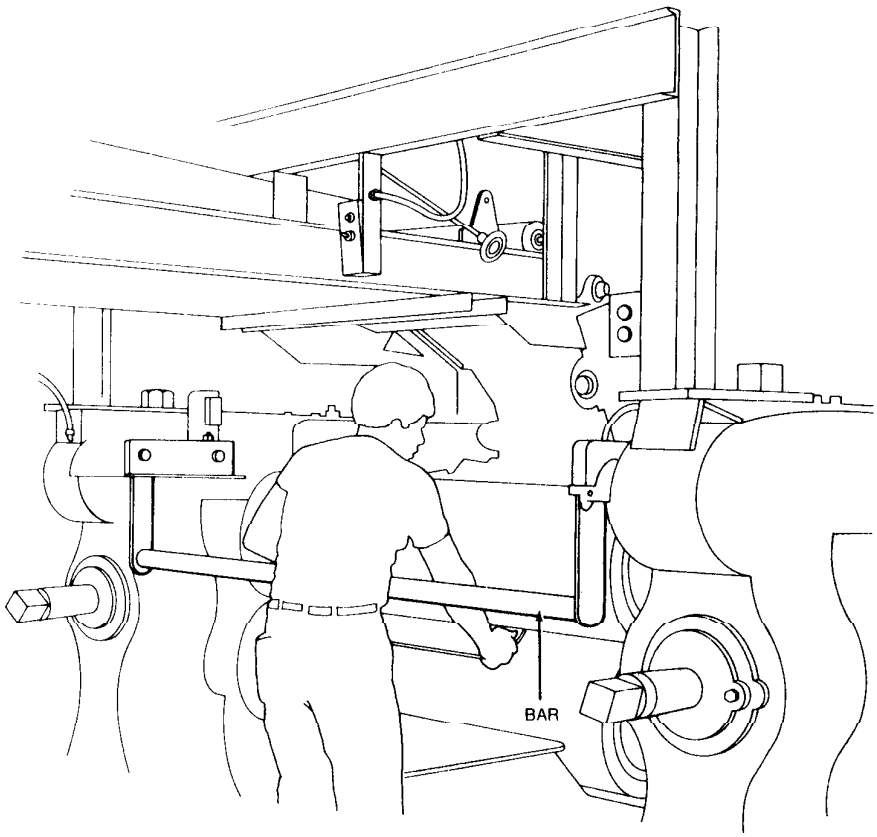

Figure 41. Pressure-sensitive body bar on a rubber mill

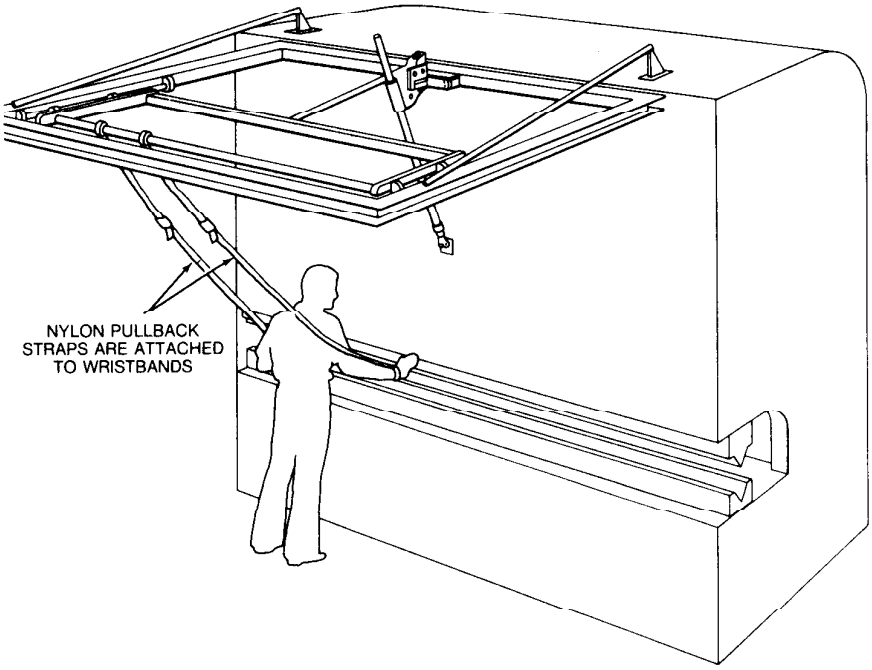

Figure 39. Pullback device on press brake

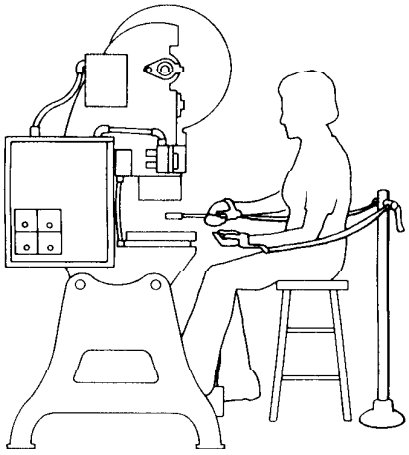

Figure 40. Restraint device on a power press

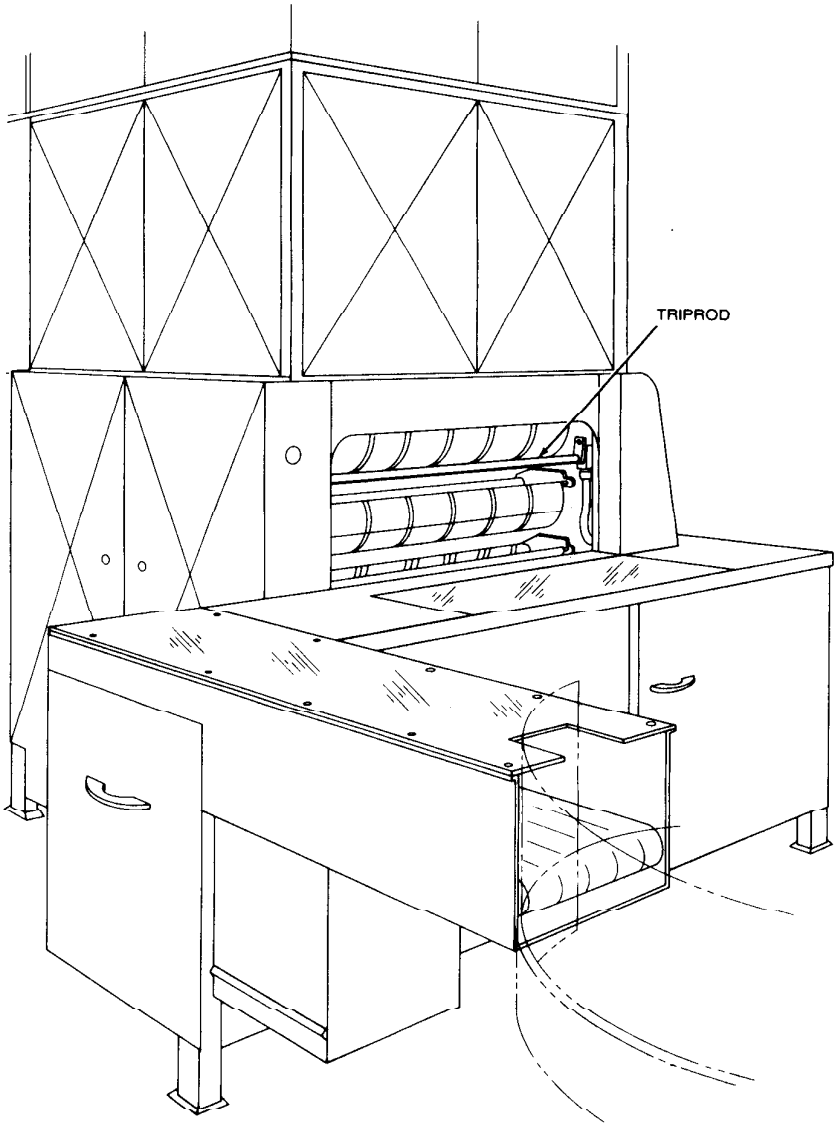

Figure 43.
Safety triprod on a bread proofer machine

When pressed by hand, the safety triprod deactivates the machine. Because it has to be actuated by the operator during an emergency situation, its proper position is also critical. Figure 42 shows a triprod located above the rubber mill. Figure 43 shows another application of a triprod.

Safety tripwire cables are located around the perimeter of or near the danger area. The operator must be able to reach the cable with either hand to stop the machine. Figure 44 shows a calender equipped with this type of control, while Figure 45 shows a tomato sorter with a safety tripwire cable.

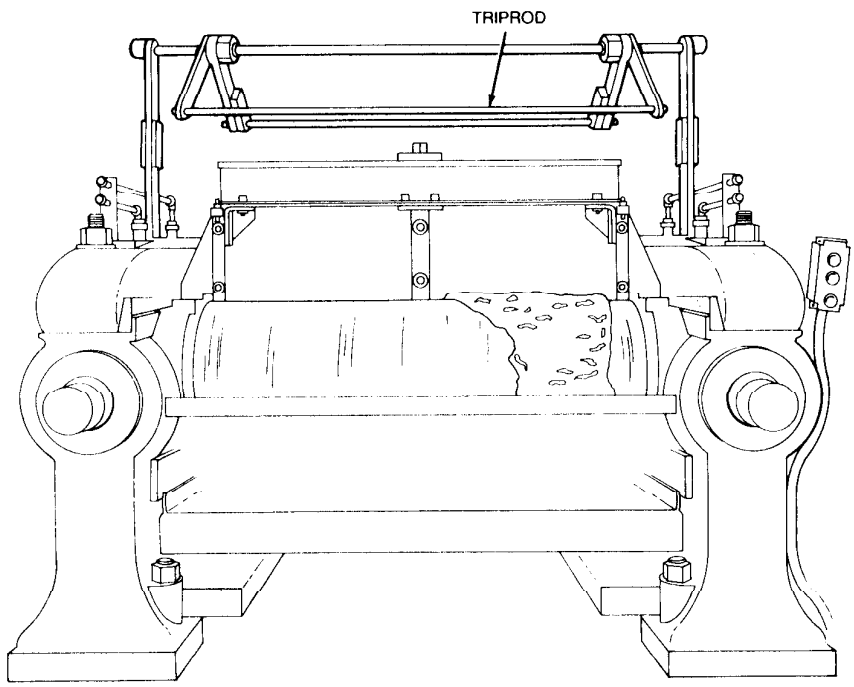

Figure 42. Safety triprod on a rubber mill

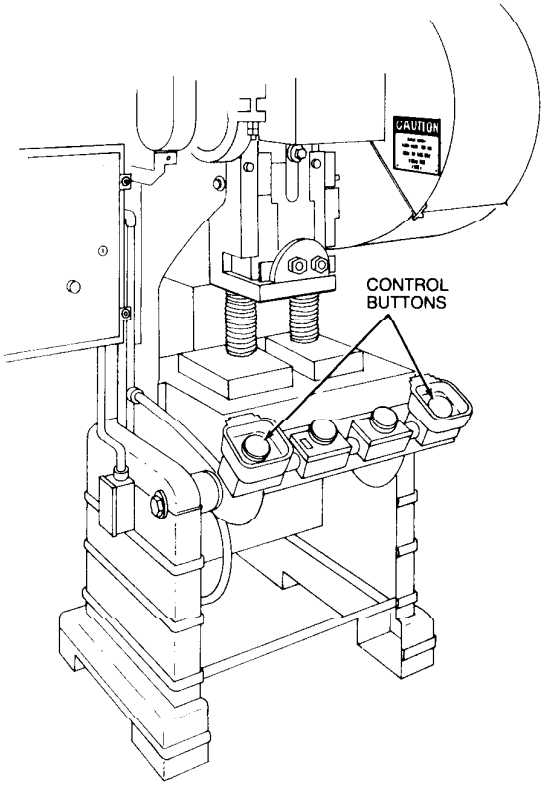

Figure 46.
Two-hand control buttons on part-revolution clutch power press

Two-Hand Control

The two-hand control requires constant, concurrent pressure by the operator to activate the machine. This kind of control requires a part-revolution clutch, brake, and a brake monitor if used on a power press as shown in Figure 46. With this type of device the operator's hands are required to be at a safe location (on control buttons) and at a safe distance from the danger area while the machine completes its closing cycle.

Two-Hand Trip

The two-hand trip in Figure 47 requires concurrent application of both of the operator's control buttons to activate the machine cycle, after which the hands are free. This device is usually used with machines equipped with full-revolution clutches. The trips must be placed far enough from the point of operation to make it impossible for the operator to move his or her hands from the trip buttons or handles into the point of operation before the first half of the cycle is completed. Thus the operator's hands are kept far enough away to prevent them from being accidentally placed in the danger area prior to the slide/ram or blade reaching the full "down" position.

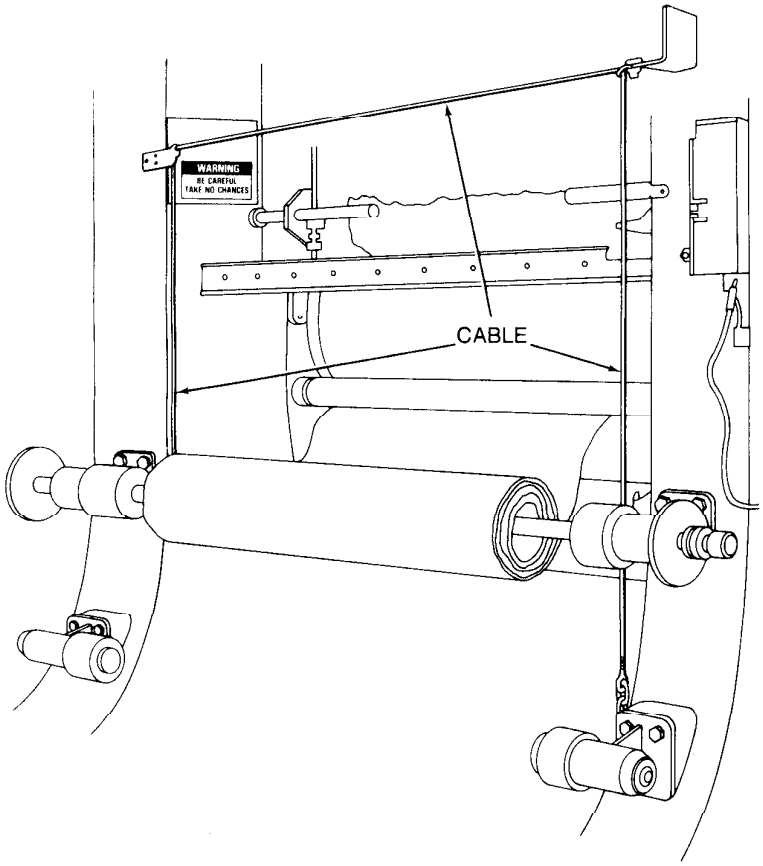

Figure 44.
Safety tripwire cable on a calender

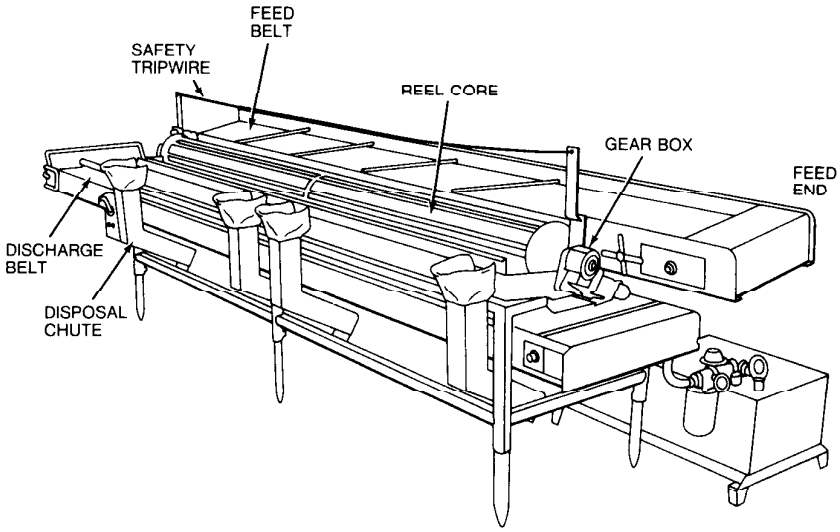

Figure 45.
Safety tripwire on a tomato sorter

Gate

A gate is a movable barrier which protects the operator at the point of operation before the machine cycle can be started. Gates are, in many instances, designed to be operated with each machine cycle.

Figure 48 shows a horizontal injection molding machine with a gate. It must be in the closed position before the machine can function.

Figure 49 shows a gate on a power press. If the gate is not permitted to descend to the fully closed position, the press will not function.

Another potential application of this type of guard is where the gate is a component of a perimeter safeguarding system. Here the gate may provide protection not only to the operator but to pedestrian traffic as well.

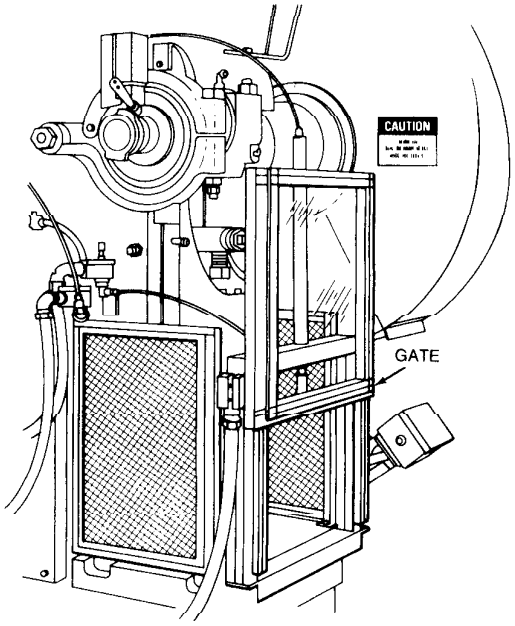

Figure 49.
Power press with gate

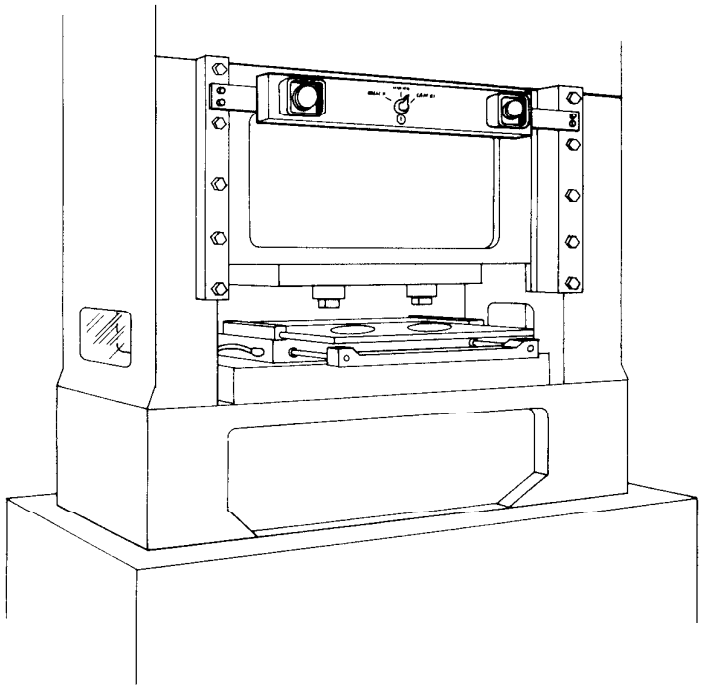

Figure 47.
Two-hand trip buttons on full-revolution clutch power press

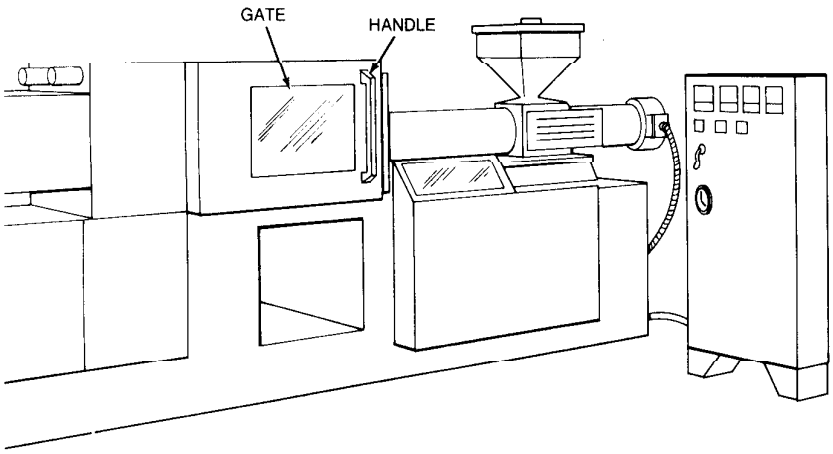

Figure 48.
Horizontal injection molding machine with gate

DEVICES

Method	Safeguarding Action	Advantages	Limitations
Safety trip controls: Pressure-sensitive body bar Safety triprod Safety tripwire	Stops machine when tripped	Simplicity of use	All controls must be manually activated May be difficult to activate controls because of their location Only protects the operator May require special fixtures to hold work May require a machine brake
Two-hand control	Concurrent use of both hands is required, preventing the operator from entering the danger area	Operator's hands are at a predetermined location Operator's hands are free to pick up a new part after first half of cycle is completed	Requires a partial cycle machine with a brake Some two-hand controls can be rendered unsafe by holding with arm or blocking, thereby permitting one-hand operation Protects only the operator
Two-hand trip	Concurrent use of two hands on separate controls prevents hands from being in danger area when machine cycle starts	Operator's hands are away from danger area Can be adapted to multiple operations No obstruction to hand feeding Does not require adjustment for each operation	Operator may try to reach into danger area after tripping machine Some trips can be rendered unsafe by holding with arm or blocking, thereby permitting one-hand operation Protects only the operator May require special fixtures
Gate	Provides a barrier between danger area and operator or other personnel	Can prevent reaching into or walking into the danger area	May require frequent inspection and regular maintenance May interfere with operator's ability to see the work

DEVICES

Method	Safeguarding Action	Advantages	Limitations
Photoelectric (optical)	Machine will not start cycling when the light field is interrupted When the light field is broken by any part of the operator's body during the cycling process, immediate machine braking is activated	Can allow freer movement for operator	Does not protect against mechanical failure May require frequent alignment and calibration Excessive vibration may cause lamp filament damage and premature burnout Limited to machines that can be stopped
Radiofrequency (capacitance)	Machine cycling will not start when the capacitance field is interrupted When the capacitance field is disturbed by any part of the operator's body during the cycling process, immediate machine braking is activated	Can allow freer movement for operator	Does not protect against mechanical failure Antennae sensitivity must be properly adjusted Limited to machines that can be stopped
Electromechanical	Contact bar or probe travels a predetermined distance between the operator and the danger area Interruption of this movement prevents the starting of machine cycle	Can allow access at the point of operation	Contact bar or probe must be properly adjusted for each application; this adjustment must be maintained properly
Pullback	As the machine begins to cycle, the operator's hands are pulled out of the danger area	Eliminates the need for auxiliary barriers or other interference at the danger area	Limits movement of operator May obstruct work-space around operator Adjustments must be made for specific operations and for each individual Requires frequent inspections and regular maintenance Requires close supervision of the operator's use of the equipment
Restraint (holdback)	Prevents the operator from reaching into the danger area	Little risk of mechanical failure	Limits movements of operator May obstruct work-space Adjustments must be made for specific operations and each individual Requires close supervision of the operator's use of the equipment

wherever they are necessary and possible in order to provide protection from exposure to hazards.

Types of feeding and ejection methods . . .

Automatic feeds reduce the exposure of the operator during the work process, and sometimes do not require any effort by the operator after the machine is set up and running.

In Figure 50, the power press has an automatic feeding mechanism. Notice the transparent fixed enclosure guard at the danger area.

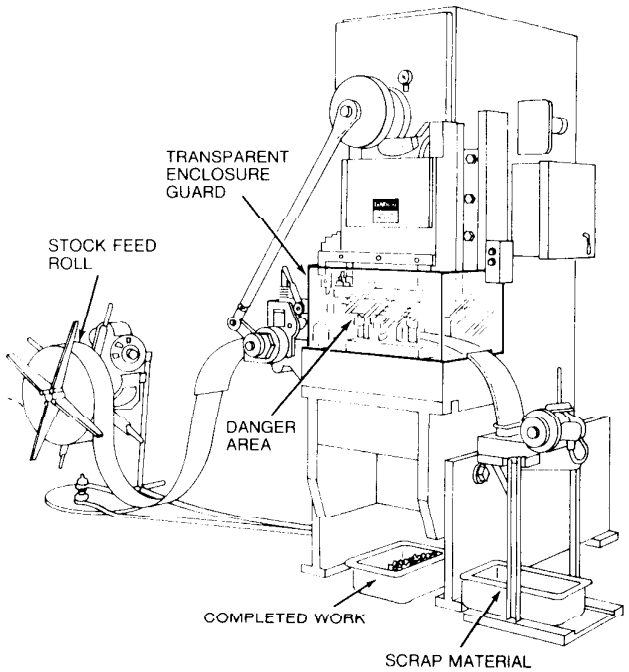

Figure 50.
Power press with automatic feed

Figure 51 shows a saw with an automatic indexing mechanism that moves the stock a predetermined distance for each cut. The traveling head automatically recycles for each cut.

With *semiautomatic feeding*, as in the case of a power press, the operator uses a mechanism to place the piece being processed under the ram at each stroke. The operator does not need to reach into the danger area, and the danger area is completely enclosed.

Figure 52 shows a chute feed. It may be either a horizontal or an inclined chute into which each piece is placed by hand. Using a chute feed on an inclined press not only helps center the piece as it slides into the die, but may also simplify the problem of ejection.

Safeguarding by Location/Distance

The examples mentioned below are a few of the numerous applications of the principle of safeguarding by location/distance. A thorough hazard analysis of each machine and particular situation is absolutely essential before attempting this safeguarding technique.

To safeguard a machine by location, the machine or its dangerous moving parts must be so positioned that hazardous areas are not accessible or do not present a hazard to a worker during the normal operation of the machine. This may be accomplished by locating a machine so that a plant design feature, such as a wall, protects the worker and other personnel. Additionally, enclosure walls or fences can restrict access to machines. Another possible solution is to have dangerous parts located high enough to be out of the normal reach of any worker.

The feeding process can be safeguarded by location if a safe distance can be maintained to protect the worker's hands. The dimensions of the stock being worked on may provide adequate safety. For instance, if the stock is several feet long and only one end of the stock is being worked on, the operator may be able to hold the opposite end while the work is being performed. An example would be a single-end punching machine. However, depending upon the machine, protection might still be required for other personnel.

The positioning of the operator's control station provides another potential approach to safeguarding by location. Operator controls may be located at a safe distance from the machine if there is no reason for the operator to tend it.

Feeding and Ejection Methods to Improve Operator Safety

Many feeding and ejection methods do not require the operator to place his or her hands in the danger area. In some cases, no operator involvement is necessary after the machine is set up. In other situations, operators can manually feed the stock with the *assistance* of a feeding mechanism. Properly designed ejection methods do not require any operator involvement after the machine starts to function.

Some feeding and ejection methods may even create hazards themselves. For instance, a robot may eliminate the need for an operator to be near the machine but may create a new hazard itself by the movement of its arm.

Using these feeding and ejection methods does not eliminate the need for guards and devices. Guards and devices must be used

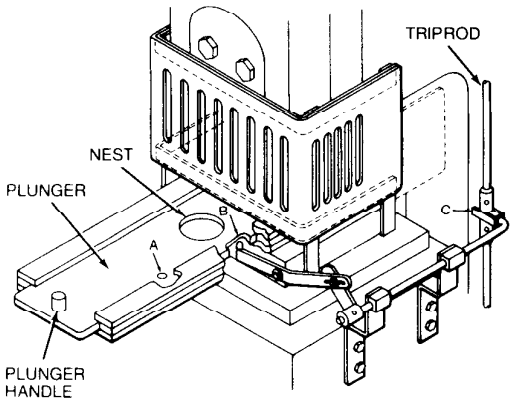

Figure 53.
Power press with plunger feed

A plunger feed is shown in Figure 53. The blanks or pieces are placed in the nest one at a time by the plunger which pushes them under the slide. Plunger feeds are useful for operations on irregularly shaped workpieces which will not stack in a magazine or will not slide easily down a gravity chute. The mechanism shown is mechanically connected to the press tripping mechanism. When the plunger is pushed in, pin "B" is allowed to rise up into hole "A," allowing yoke "C" to release so the press can be tripped.

Figure 54 shows a plunger and magazine feed. Slot "A" must be in alignment with interlock "B" before the press can be tripped.

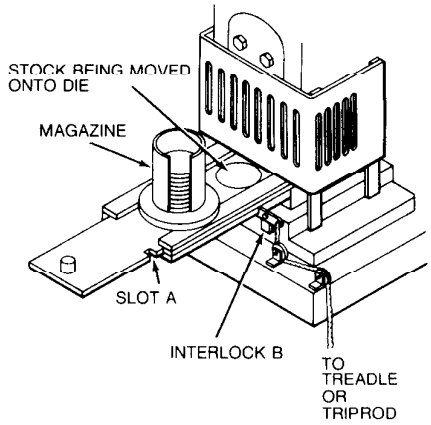

Figure 54.
Power press with plunger and magazine feed

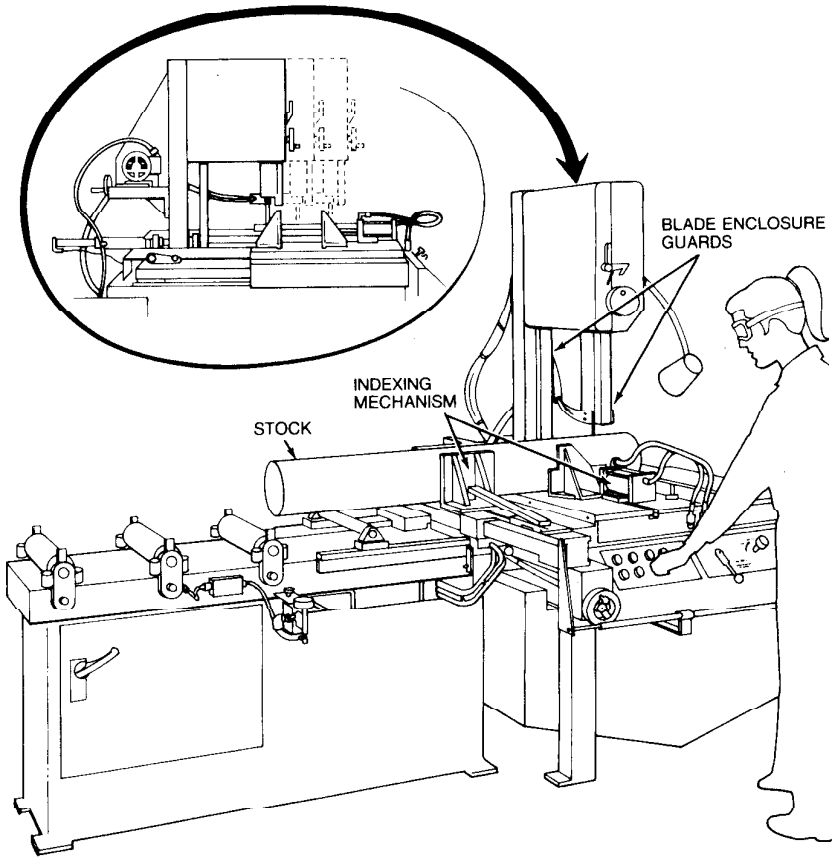

Figure 51.
Saw with automatic indexing mechanism and traveling head

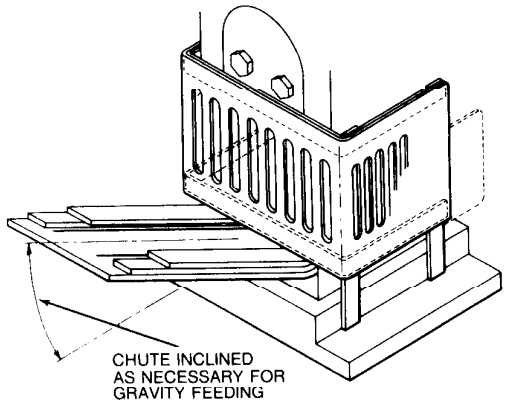

Figure 52.
Power press with chute feed

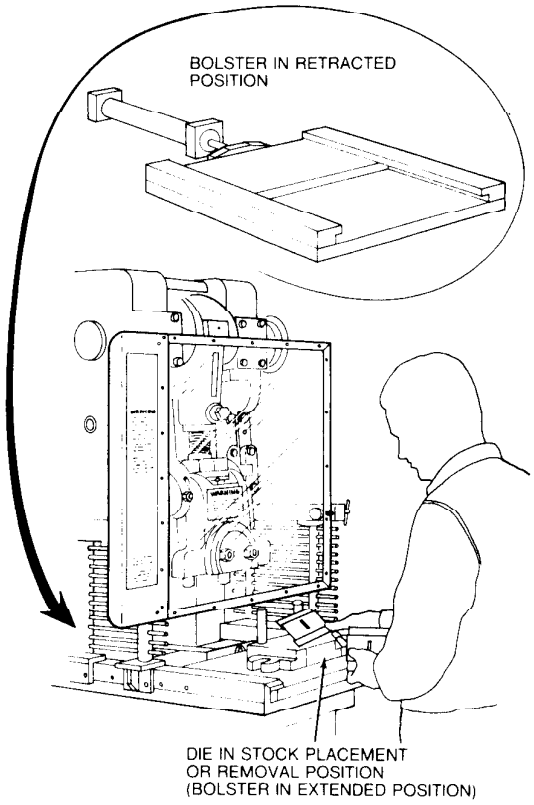

Figure 56. Power press with sliding bolster

The sliding die in Figure 55 is pulled toward the operator for safe feeding and then pushed into position under the slide prior to the downward stroke. The die moves in and out by hand or by a foot lever. The die should be interlocked with the press to prevent tripping when the die is out of alignment with the slide. Providing "stops" will prevent the die from being inadvertently pulled out of the slides.

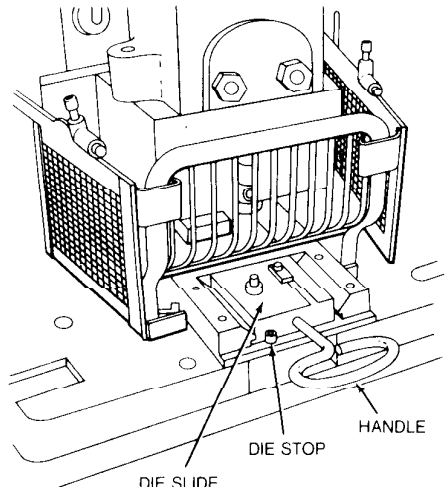

Figure 55. Power press with sliding die

Figure 56 shows a sliding bolster. The press bed is modified with a hydraulically or pneumatically controlled bolster that slides in when "start" buttons are depressed, and out when the stroke is completed.

Figure 57 shows a double-dial feed. The dials revolve with each stroke of the press. The operator places the part to be processed in a nest on the dial which is positioned in front of the die. The dial is indexed with each upstroke of the press to deliver the nested part into the die.

Automatic ejection may employ either an air-pressure or a mechanical apparatus to remove the completed part from a press. It may be interlocked with the operating controls to prevent operation until part ejection is accomplished. This method requires additional safeguards for full protection of the operator.

As shown in Figure 58, the pan shuttle mechanism moves under the finished part as the slide moves toward the "up" position. The shuttle then catches the part stripped from the slide by the knock-out pins and deflects it into a chute. When the ram moves down toward the next blank, the pan shuttle moves away from the die area.

Figures 59 and 60 show air ejection and mechanical ejection mechanisms, respectively. Note: Air ejection methods often present a noise hazard to operators.

Figure 61 shows a *semiautomatic ejection* mechanism used on a power press. When the plunger is withdrawn from the die area, the ejector leg, which is mechanically coupled to the plunger, kicks the completed work out.

Robots are machines that load and unload stock, assemble parts, transfer objects, or perform other tasks. Essentially, they perform work otherwise done by an operator. They are best used in high-production processes requiring repeated routines. However, they may create hazards themselves, and, if they do, appropriate guards must be used.

Figures 62, 62a, and 62b, respectively, show a type of robot in operation, the danger areas it can create, and an example of the kind of task (feeding a press) it can perform.

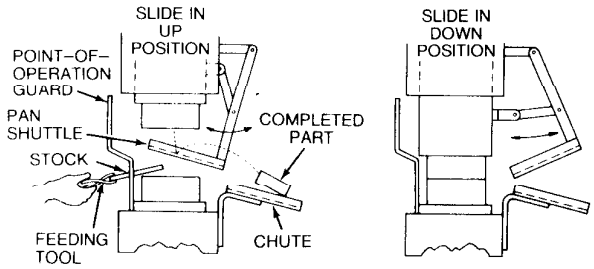

Figure 58.
Shuttle ejection mechanism

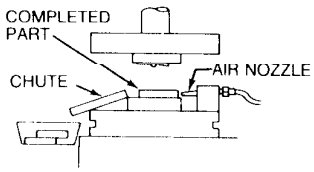

Figure 59.
Air ejection

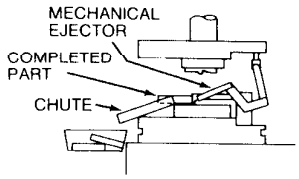

Figure 60.
Mechanical ejection

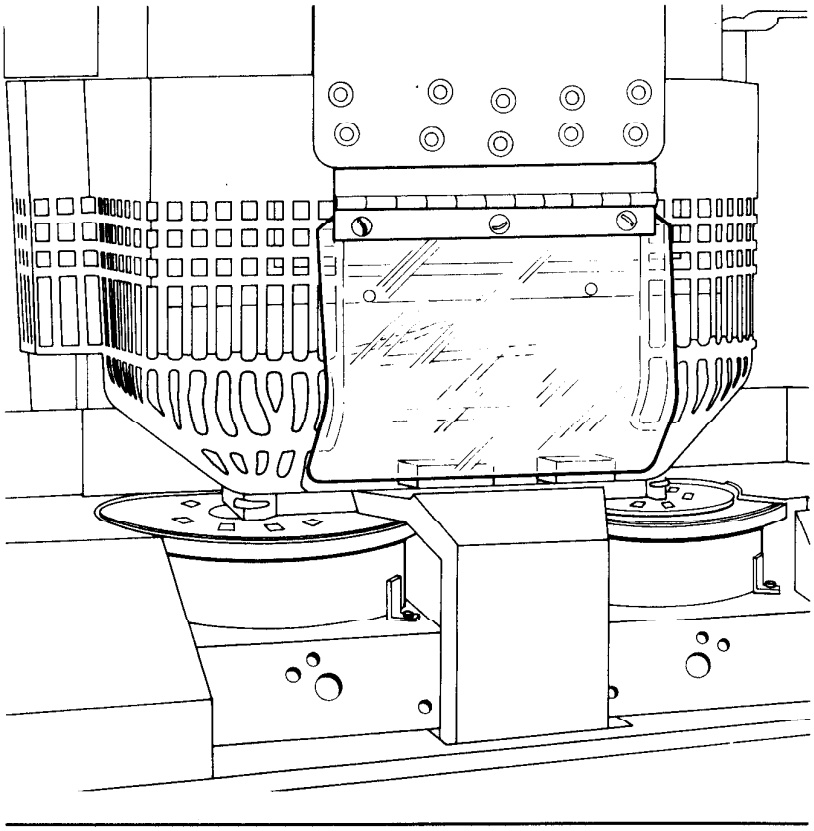

Figure 57.
Power press with double dial feed

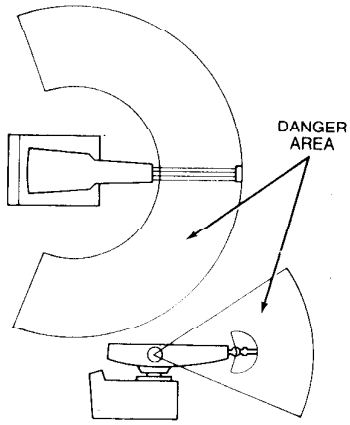

Figure 62a.
Potential danger areas

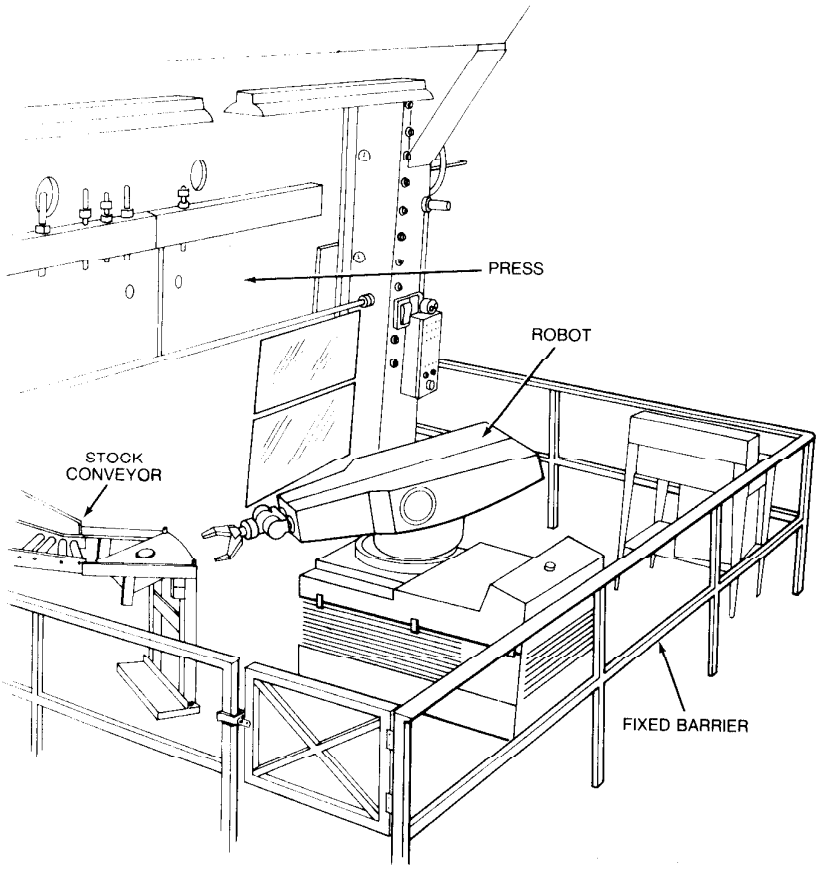

Figure 62b.

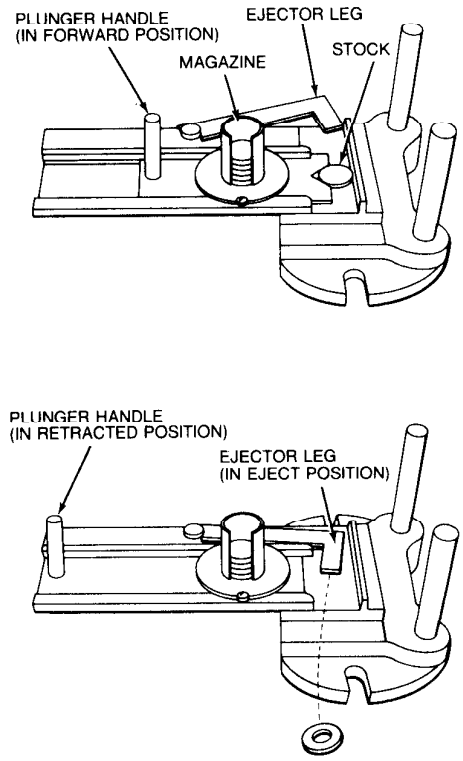

Figure 61. Semiautomatic ejection mechanism

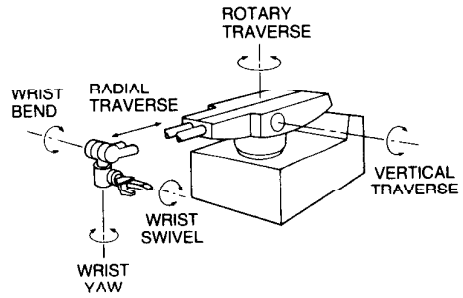

Figure 62. Robot movement capability

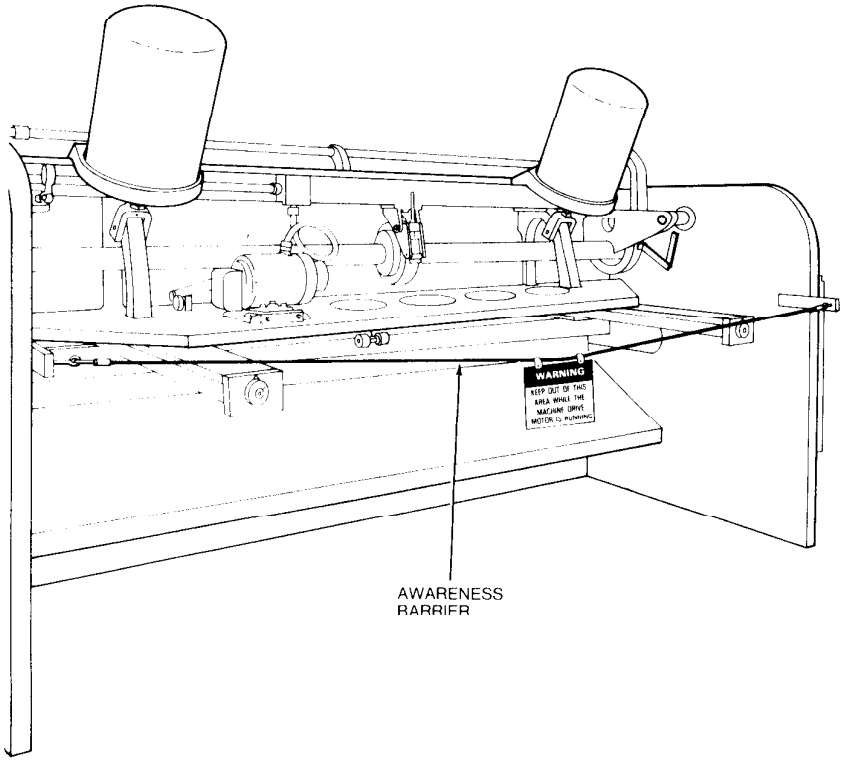

Figure 63.
Rear view of power squaring shear

Miscellaneous Aids

While these aids do not give complete protection from machine hazards, they may provide the operator with an extra margin of safety. Sound judgment is needed in their application. Below are several examples of possible applications.

The awareness barrier does not provide physical protection, but serves only to remind a person that he or she is approaching the danger area. Generally, awareness barriers are not considered adequate where continual exposure to the hazard exists.

Figure 63 shows a rope used as an awareness barrier on the rear of a power squaring shear. Although the barrier does not physically prevent a person from entering the danger area, it calls attention to it.

Figure 64 shows an awareness barrier on a stitching machine.

Shields, another aid, may be used to provide protection from flying particles, splashing cutting oils, or coolants. Figure 65 shows several potential applications.

FEEDING AND EJECTION METHODS

Method	Safeguarding Action	Advantages	Limitations
Automatic Feed	Stock is fed from rolls, indexed by machine mechanism, etc.	Eliminates the need for operator involvement in the danger area	Other guards are also required for operator protection—usually fixed barrier guards Requires frequent maintenance May not be adaptable to stock variation
Semiautomatic Feed	Stock is fed by chutes, movable dies, dial feed, plungers, or sliding bolster		
Automatic Ejection	Work pieces are ejected by air or mechanical means		May create a hazard of blowing chips or debris Size of stock limits the use of this method Air ejection may present a noise hazard
Semiautomatic Ejection	Workpieces are ejected by mechanical means which are initiated by the operator	Operator does not have to enter danger area to remove finished work	Other guards are required for operator protection May not be adaptable to stock variation
Robots	They perform work usually done by operator	Operator does not have to enter danger area Are suitable for operations where high stress factors are present, such as heat and noise	Can create hazards themselves Require maximum maintenance Are suitable only to specific operations

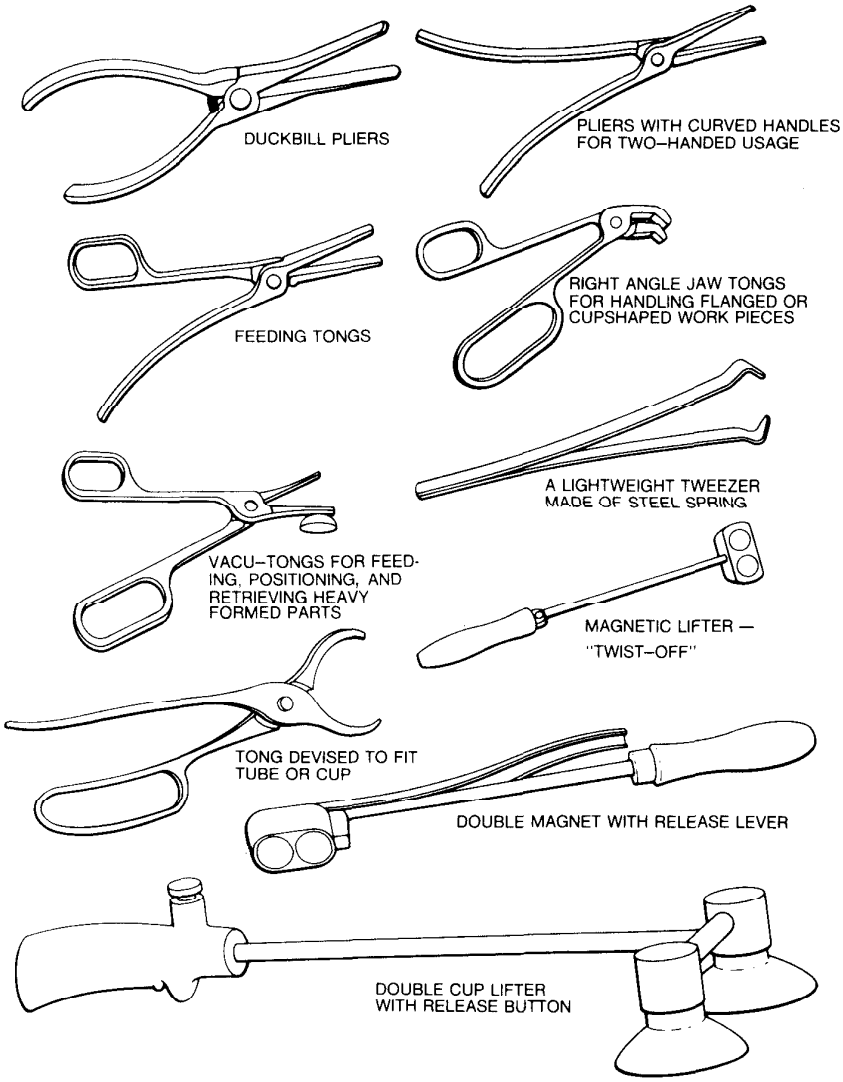

Figure 66. Holding tools

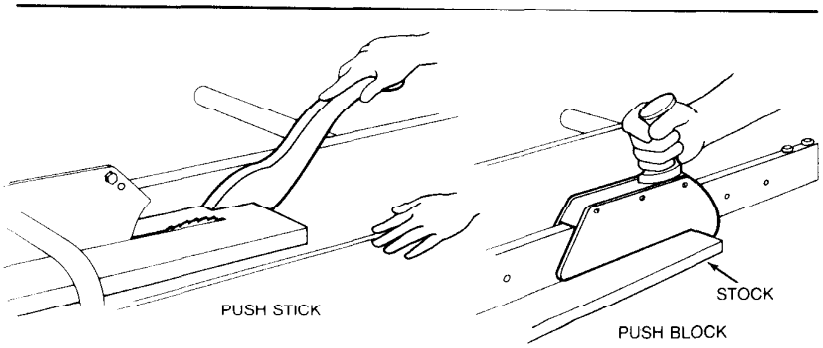

Figure 67.

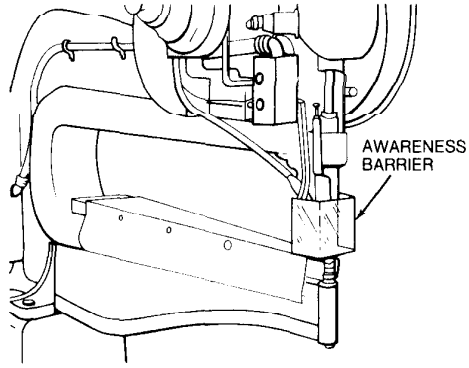

Figure 64. Awareness barrier on stitching machine

Figure 65.

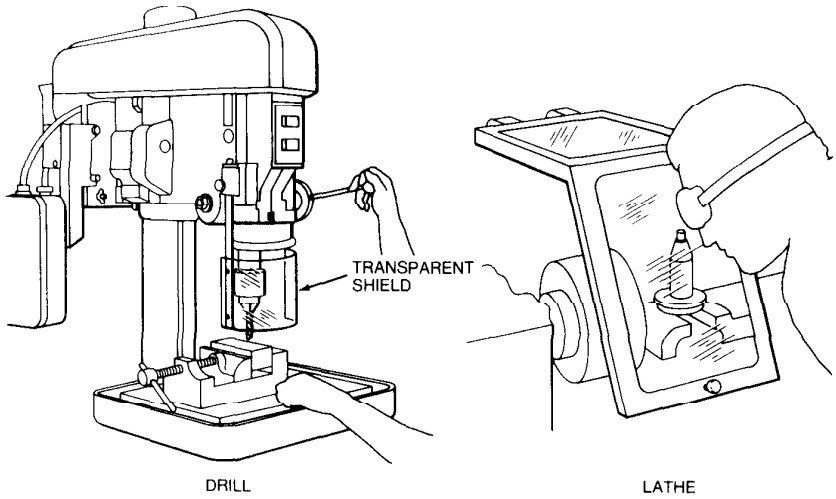

Holding tools can place or remove stock. A typical use would be for reaching into the danger area of a press or press brake. Figure 66 shows an assortment of tools for this purpose. Holding tools should not be used *instead of* other machine safeguards; they are merely a supplement to the protection that other guards provide.

A push stick or block, such as those in Figure 67, may be used when feeding stock into a saw blade. When it becomes necessary for hands to be in close proximity to the blade, the push stick or block may provide a few inches of safety and prevent a severe injury. In the illustration the push block fits over the fence.

Mechanical Power Transmission Apparatus Guarding

A significant difference between power transmission guards and point-of-operation guards is that the former type needs no opening for feeding stock. The only openings necessary for power transmission guards are those for lubrication, adjustment, repair, and inspection. These openings should be provided with covers that cannot be removed except by using tools for service or adjustment.

To be effective, power transmission guards should cover all moving parts in such a manner that no part of the operator's body can come in contact with them.

Guard Material

Under many circumstances, metal is the best material for guards. Guard framework is usually made from structural shapes, pipe, bar, or rod stock. Filler material generally is expanded or perforated or solid sheet metal or wire mesh. It may be feasible to use plastic or safety glass where visibility is required.

Guards made of wood generally are not recommended because of their flammability and lack of durability and strength. However, in areas where corrosive materials are present, wooden guards may be the better choice.

Chapter 3

Guard Construction

Today many builders of single-purpose machines provide point-of-operation and power transmission safeguards as standard equipment. However, not all machines in use have built-in safeguards provided by the manufacturer.

Guards designed and installed by the *builder* offer two main advantages:

- They usually conform to the design and function of the machine.
- They can be designed to strengthen the machine in some way or to serve some additional functional purposes.

User-built guards are sometimes necessary for a variety of reasons. They have these advantages:

- Often, with older machinery, they are the only practical solution.
- They may be the only choice for mechanical power transmission apparatus in older plants, where machinery is not powered by individual motor drive.
- They permit options for point-of-operation safeguards when skilled personnel and machinery are available to make them.
- They can be designed and built to fit unique and even changing situations.
- They can be installed on individual dies and feeding mechanisms.
- Design and installation of machine safeguards by plant personnel can help to promote safety consciousness in the workplace.

However, they also have disadvantages:

- User-built guards may not conform well to the configuration and function of the machine.
- There is a risk that user-built guards may be poorly designed or built.

Point-of-Operation Guards

Point-of-operation guarding is complicated by the number and complexity of machines and also by the different uses for individual machines. For these reasons, not all machine builders provide point-of-operation guards on their products. In many cases a point-of-operation guard can only be made and installed by the user after a thorough hazard analysis of the work requirements.

whether the source is electrical, mechanical, pneumatic, hydraulic, or a combination of these. Energy accumulation devices must be "bled down."

Electrical: Unexpected energizing of any electrical equipment that can be started by automatic or manual remote control may cause electric shock or other serious injuries to the machine operator, the maintenance worker, or others operating adjacent machines controlled by the same circuit. For this reason, when maintenance personnel must repair electrically powered equipment, they should open the circuit at the switch box and padlock the switch (lock it out) in the "off" position. This switch should be tagged with a description of the work being done, the name of the maintenance person, and the department involved. A lockout hasp is shown in Figure 68.

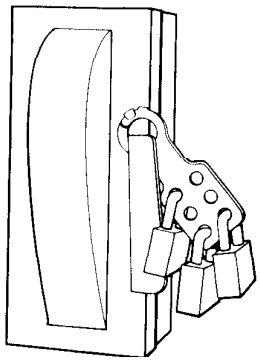

Figure 68. Lockout hasp

Mechanical: Figure 69 shows safety blocks being used as an additional safeguard on a mechanical power press, even though the machine has been locked out electrically. The safety blocks prevent the ram from coming down under its own weight.

Pneumatic and hydraulic: Figure 70 shows a lockout valve. The lever-operated air valve used during repair or shutdown to keep a pneumatic-powered machine or its components from operating can be locked open or shut. Before the valve can be opened, everyone working on the machine must use his or her own key to release the lockout. A sliding-sleeve valve exhausts line pressure at the same time it cuts off the air supply. Valves used to lock out pneumatic or hydraulic-powered machines should be designed to accept locks or lockout adapters and should be capable of "bleeding off" pressure residues that could cause any part of the machine to move.

In shops where several maintenance persons might be working on the same machine, multiple lockout devices accommodating

Chapter 4

Machinery Maintenance and Repair

Good maintenance and repair procedures can contribute significantly to the safety of the maintenance crew as well as to that of machine operators. But the variety and complexity of machines to be serviced, the hazards associated with their power sources, the special dangers that may be present during machine breakdown, and the severe time constraints often placed on maintenance personnel all make safe maintenance and repair work difficult.

Training and aptitude of people assigned to these jobs should make them alert for the intermittent electrical failure, the worn part, the inappropriate noise, the cracks or other signs that warn of impending breakage or that a safeguard has been damaged, altered, or removed. By observing machine operators at their tasks and listening to their comments, maintenance personnel may learn where potential trouble spots are and give them early attention before they develop into sources of accidents and injury. Sometimes all that is needed to keep things running smoothly and safely is machine lubrication or adjustment. Any damage observed or suspected should be reported to the supervisor; if the condition impairs safe operation, the machine should be taken out of service for repair. Safeguards that are missing, altered, or damaged also should be reported so appropriate action can be taken to insure against worker injury.

If possible, machine design should permit routine lubrication and adjustment without removal of safeguards. But when safeguards must be removed, the maintenance and repair crew must never fail to replace them before the job is considered finished.

Is it necessary to oil machine parts while a machine is running? If so, special safeguarding equipment may be needed solely to protect the oiler from exposure to hazardous moving parts. Maintenance personnel must know which machines can be serviced while running and which cannot. "If in doubt, lock it out." Obviously, the danger of accident or injury is reduced by shutting off all sources of energy.

In situations where the maintenance or repair worker would necessarily be exposed to electrical elements or hazardous moving machine parts in the performance of the job, there is no question that power sources must be shut off and locked out before work begins. Warning signs or tags are inadequate insurance against the untimely energizing of mechanical equipment.

Thus, one of the first procedures for the maintenance person is to disconnect and lock out the machine from its power sources,

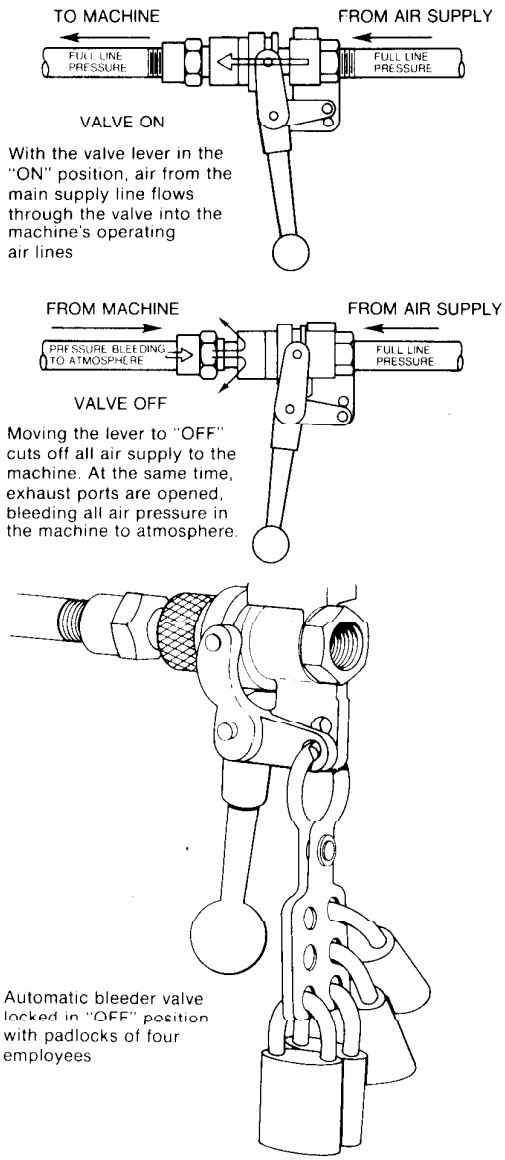

Figure 70. Lockout valve

6. After maintenance is completed, all machine safeguards that were removed should be replaced, secured, and checked to be sure they are functioning properly.
7. Only after ascertaining that the machine is ready to perform safely should padlocks be removed, and the machine cleared for operation.

The maintenance and repair facility in the plant deserves consideration here. Are all the right tools on hand and in good repair? Are lubricating oils and other common supplies readily available

several padlocks are used. The machine can't be reactivated until each person removes his or her lock. As a matter of general policy, lockout control is gained by the simple procedure of issuing personal padlocks to each maintenance or repair person; no one but that person can remove the padlock when work is completed, reopening the power source on the machine just serviced.

Following are the steps of a typical lockout procedure that can be used by maintenance and repair crews:

1. Alert the operator and supervisor.
2. Identify all sources of residual energy.
3. Before starting work, place padlocks on the switch, lever, or valve, locking it in the "off" position, installing tags at such locations to indicate maintenance in progress.
4. Ensure that all power sources are off, and "bleed off" hydraulic or pneumatic pressure, or "bleed off" any electrical current (capacitance), as required, so machine components will not accidentally move.
5. Test operator controls.

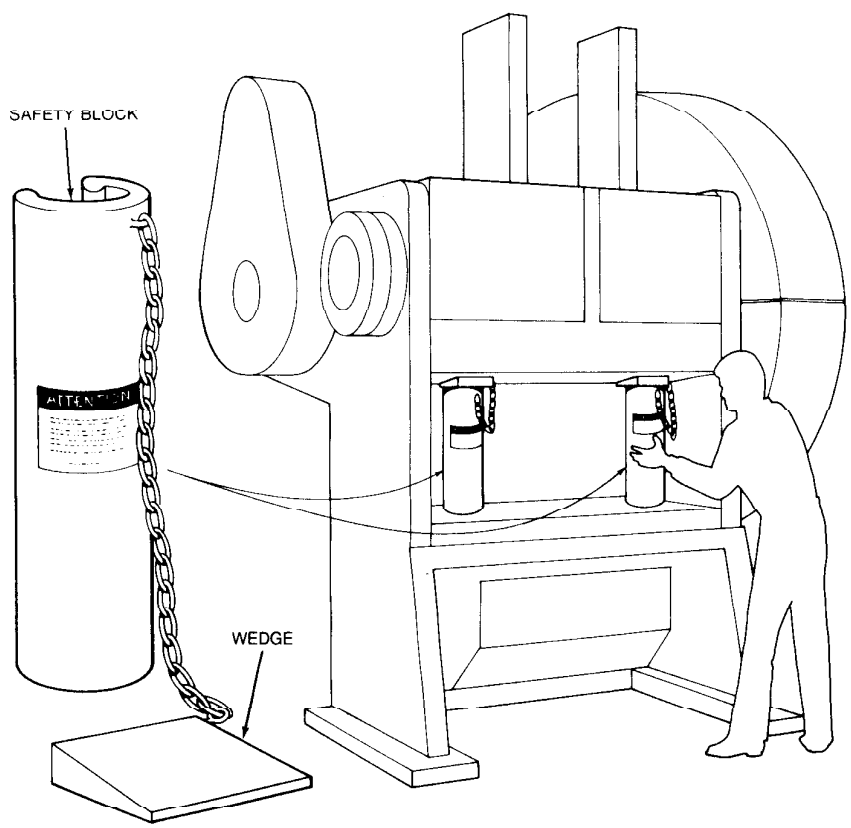

Figure 69. Safety blocks installed on power press

Checklist

Answers to the following questions should help the interested reader to determine the safeguarding needs of his or her own workplace, by drawing attention to hazardous conditions or practices requiring correction.

Requirements for All Safeguards

	Yes	No
1. Do the safeguards provided meet the minimum OSHA requirements?	____	____
2. Do the safeguards prevent workers' hands, arms, and other body parts from making contact with dangerous moving parts?	____	____
3. Are the safeguards firmly secured and not easily removable?	____	____
4. Do the safeguards ensure that no objects will fall into the moving parts?	____	____
5. Do the safeguards permit safe, comfortable, and relatively easy operation of the machine?	____	____
6. Can the machine be oiled without removing the safeguard?	____	____
7. Is there a system for shutting down the machinery before safeguards are removed?	____	____
8. Can the existing safeguards be improved?	____	____

Mechanical Hazards

The point of operation:

1. Is there a point-of-operation safeguard provided for the machine?	____	____
2. Does it keep the operator's hands, fingers, body out of the danger area?	____	____
3. Is there evidence that the safeguards have been tampered with or removed?	____	____
4. Could you suggest a more practical, effective safeguard?	____	____
5. Could changes be made on the machine to eliminate the point-of-operation hazard entirely?	____	____

Power transmission apparatus:

1. Are there any unguarded gears, sprockets, pulleys, or flywheels on the apparatus?	____	____
2. Are there any exposed belts or chain drives?	____	____
3. Are there any exposed set screws, key ways, collars, etc.?	____	____
4. Are starting and stopping controls within easy reach of the operator?	____	____
5. If there is more than one operator, are separate controls provided?	____	____

Other moving parts:

1. Are safeguards provided for all hazardous moving parts of the machine, including auxiliary parts?	____	____

Nonmechanical Hazards

1. Have appropriate measures been taken to safeguard workers against noise hazards?	____	____
2. Have special guards, enclosures, or personal protective equipment been provided, where necessary, to protect workers from exposure to harmful substances used in machine operation?	____	____

Electrical Hazards

1. Is the machine installed in accordance with National Fire Protection Association and National Electrical Code requirements?	____	____
2. Are there loose conduit fittings?	____	____
3. Is the machine properly grounded?	____	____
4. Is the power supply correctly fused and protected?	____	____
5. Do workers occasionally receive minor shocks while operating any of the machines?	____	____

and safely stored? Are commonly used machine parts and hardware kept in stock so that the crews aren't encouraged (even obliged) to improvise, at the risk of doing an unsafe repair, or to postpone a repair job? And don't overlook the possibility that maintenance equipment itself may need guarding of some sort. The same precaution applies to tools and machines used in the repair shop. Certainly, the maintenance and repair crew are entitled to the same protection that their service provides to the machine operators in the plant.

Training

	Yes	No
1. Do operators and maintenance workers have the necessary training in how to use the safeguards and why?	____	____
2. Have operators and maintenance workers been trained in where the safeguards are located, how they provide protection, and what hazards they protect against?	____	____
3. Have operators and maintenance workers been trained in how and under what circumstances guards can be removed?	____	____
4. Have workers been trained in the procedures to follow if they notice guards that are damaged, missing, or inadequate?	____	____

Protective Equipment and Proper Clothing

1. Is protective equipment required?	____	____
2. If protective equipment is required, is it appropriate for the job, in good condition, kept clean and sanitary, and stored carefully when not in use?	____	____
3. Is the operator dressed safely for the job (i.e., no loose-fitting clothing or jewelry)?	____	____

Machinery Maintenance and Repair

1. Have maintenance workers received up-to-date instruction on the machines they service?	____	____
2. Do maintenance workers lock out the machine from its power sources before beginning repairs?	____	____
3. Where several maintenance persons work on the same machine, are multiple lockout devices used?	____	____
4. Do maintenance persons use appropriate and safe equipment in their repair work?	____	____
5. Is the maintenance equipment itself properly guarded?	____	____

The Division of Education and Training

The Kentucky Occupational Safety and Health Program's Division of Education and Training was created to help employers and employees comply voluntarily with safety and health regulations. The Division offers a wide variety of cost-free services including training, on-site consultation, standards information and publications such as this one. Other publications available include the following:

GENERAL INFORMATION

- Does OSHA Have You Puzzled?
- Employer-Employee Rights and Responsibilities
- Kentucky Recordkeeping Guidelines
- Occupational Injury/Illness Annual Survey Report
- On-Site Consultation
- Training Services

TECHNICAL INFORMATION

- Construction Checklist
- General Industry Checklist
- Guide to Inspecting, Testing and Recording for General Industry
- Mechanical Power Presses
- Trenching and Shoring
- Welding, Cutting and Brazing

"No individual in the United States shall, on the grounds of race, color, religion, sex, national origin, age, disability, political affiliation or belief, be excluded from participation in, or denied the benefits of, or be subjected to discrimination under any program or activity under the jurisdiction of the Kentucky Labor Cabinet."

SOURCES OF INFORMATION REGARDING OCCUPATIONAL SAFETY AND HEALTH IN KENTUCKY

For information concerning the occupational safety and health standards, regulations, interpretations and actions of the Kentucky Occupational Safety and Health Standards Board, contact:

OSH Regulations Development
and Interpretations Office
Kentucky Labor Cabinet
Frankfort, Kentucky 40601
(502) 564-3070

For information concerning Occupational Safety and Health training, consultation, technical assistance, publications and OSH recordkeeping forms, contact:

Division of Education and Training
Kentucky Occupational Safety and Health Program
Kentucky Labor Cabinet
Frankfort, Kentucky 40601
(502) 564-3070

For information concerning occupational safety and health enforcement, contact:

Division of Compliance
Kentucky Occupational Safety and Health Program
Kentucky Labor Cabinet
Frankfort, Kentucky 40601
(502) 564-3070

JOE NORSWORTHY
Secretary of Labor

PAUL E. PATTON
Governor

Paid for with state and federal funds